YANMAR

M9961-H11250

SERVICE MANUAL

# MARINE DIESEL ENGINE

## 6CXM-GTE

2000. 3. 10

# FOREWORD

This service manual outlines procedures for servicing and maintaining Yanmar 6CXM-GTE engines to obtain maximum life and performance. It explains about the structure, performance, important inspection points, servicing instructions and the wear limit of parts. For a full understanding of this manual, also refer to the Operation Manual and Parts Catalog. Besides reference use at your service shop, this manual can also be used as a text for your service engineers. You should understand the contents of this manual fully to offer accurate and efficient service to your customers.

**For accurate and efficient work, the following preparations are necessary:**

1. **Check the service date of your customer**
   1) When was the last service?
   2) How many months or hours has the engine been used since the last service?
   3) What was the trouble and what parts were replaced in the last service?
   4) What parts must be replaced in the present service?

2. **Preparation of Parts**
   Check the inventory of parts that are necessary for servicing.

3. **Preparation of Report Forms**
   Inspection and service check sheets, parts measurement record form, operation test record form.

4. **Prepare the servicing tools, measuring devices, containers, etc.**



APERÇU — Engine Manual — fichier complet disponible après achat 

# CONTENTS


**1. Exterior Views . . . . . 1**
**2. Specificaations . . . . . 2**
2.1 Major Sppecification . . . . . 2
**3. Disassembly and Reassembly . . . . . 4**
3.1 Preparations before Disassembly and Reassembly . . . . . 4
3.2 Tools and Agent . . . . . 5
3.3 Reassembly Procedures . . . . . 9
**4. Inspection and Servicing of Major Engine Parts . . . . . 31**
4.1 Cylinder Head . . . . . 31
4.2 Piston and Piston Pin . . . . . 36
4.3 Connecting Rod . . . . . 40
4.4 Cylinder Sleeve . . . . . 41
4.5 Cylinder Block . . . . . 43
4.6 Crankshaft and Main Bearing . . . . . 43
4.7 Cam Shaft and Valve Gear . . . . . 48
4.8 Timing Gear . . . . . 50
4.9 Lube Oil System . . . . . 51
4.10 Cooling Water System . . . . . 54
4.11 Fuel oil System . . . . . 58
4.12 Piping Diagram . . . . . 74
4.13 Electric Wiring Diagram . . . . . 75
4.14 Electrical Equipment . . . . . 76
4.15 Turbocharger . . . . . 80
**5. Periodic Inspection . . . . . 82**
**6. Service Standard . . . . . 84**
**7. Adjustment and Set Values . . . . . 86**
**8. Tightening Torque of Major Bolts and Nuts . . . . . 87**




APERÇU — Engine Manual — fichier complet disponible après achat 

# 1 Exterior Views

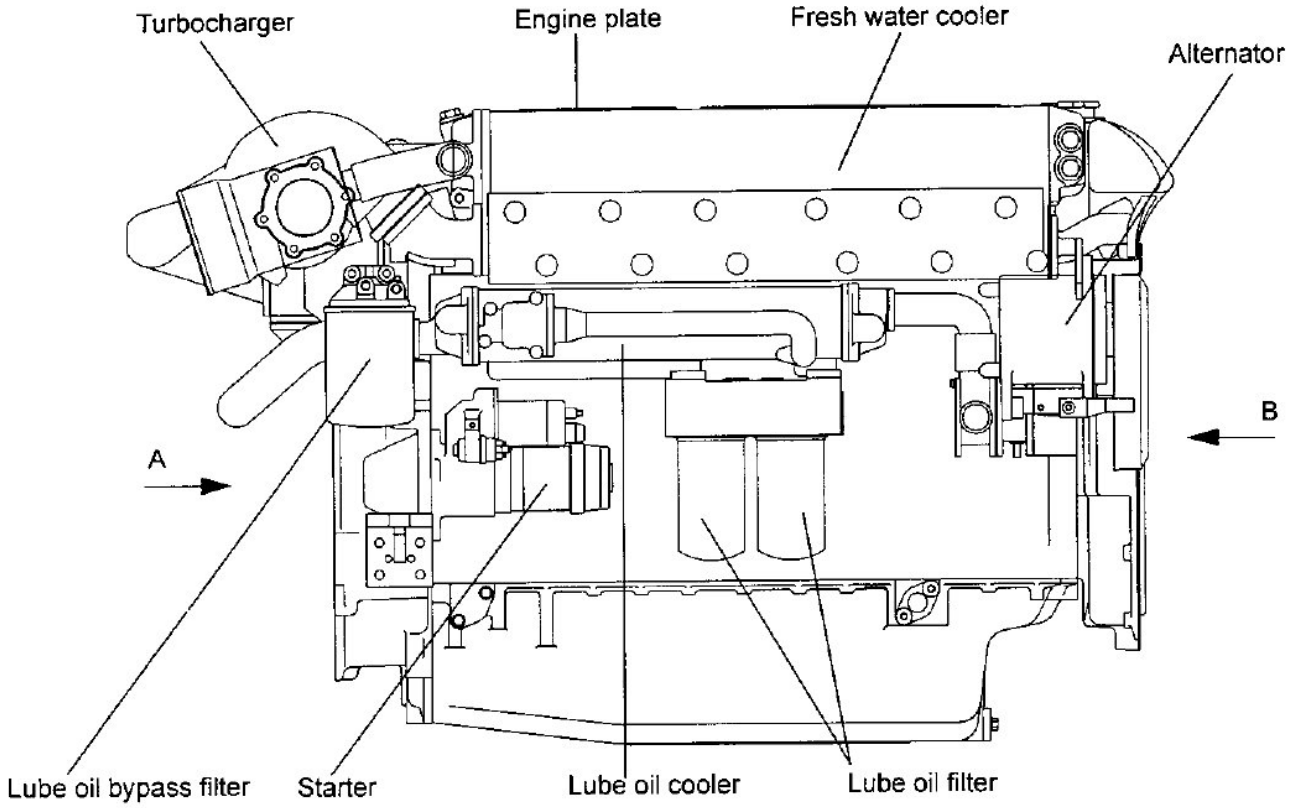


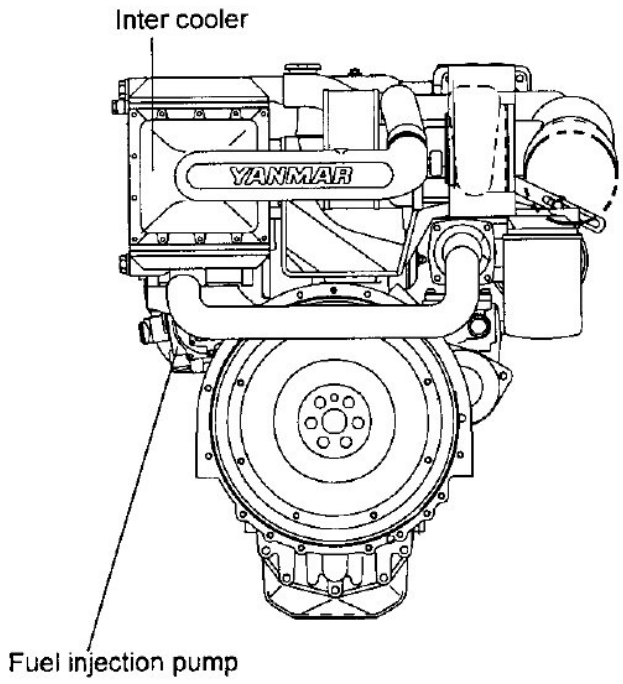


See from A

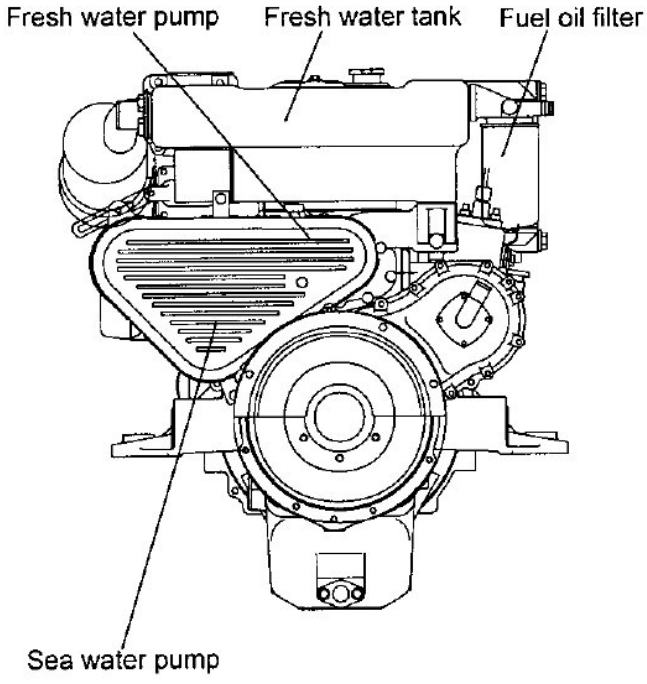


See from B



APERÇU — Engine Manual — fichier complet disponible après achat 

# 2 Specifications

## 2.1 Major Specification

| ENGINE MODEL | | UNIT | 6CXM-GTE |
|---|---|---|---|
| Type | | ——— | Vertical water-cooling 4-cycle diesel engine |
| Combustion system | | ——— | Direct injection |
| Aspiration | | ——— | Turbocharger with air cooler |
| No.of cyl. bore × stroke | | mm | 6-110 × 130 |
| Displacement | | ℓ | 7.413 |
| Continuous rating | Output/Crankshaft speed | KW(HP)/rpm | 305(415)/2750 |
| | Brake mean effective pressure | MPa(kgf/cm$^2$) | 1.797(18.32) |
| | Piston speed | m/s | 11.92 |
| Max.rating | Output/Crankshaft speed | KW(HP)/rpm | 342(465)/2850 |
| | Brake mean effective pressure | MPa(kgf/cm$^2$) | 1.943(19.81) |
| | Piston speed | m/s | 12.35 |
| Non-load rotation speed(Max./Min.) | | rpm | 3200 ± 25/700 ± 25 |
| Starting system | | ——— | Electric starting |
| Firing order | | ——— | 1—4—2—6—3—5 |
| Direction of rotation (viewed from stem) | Crankshaft | ——— | Counter-clockwise |
| Lub.oil capacity | Max | ℓ | 22 |
| | Efect | ℓ | 8 |
| Fuel system | Fuel injection pump | ——— | In-line type |
| | Injection timing | ——— | b.T.D.C 13° ± 1 |
| | Type of injection nozzle | ——— | Hole type (Φ0.34×150°) |
| | Injection pressure | MPa(kgf/cm$^2$) | 23.5±0.5 (240±5) |
| | Applicable fuel | ——— | Diesel oil (Cetan value ≥45) |
| | Fuel filter | ——— | Paper element |
| Engine lub.oil system | Lubrication | ——— | Forced lubrication by gear pump |
| | Lub.oil discharge volume | ℓ/hr | 7100 (at crank shaft speed 2750 rpm) |
| | Lub.oil pressure | MPa(kgf/cm$^2$) | 0.49(5.0) |
| | Lub.oil filter | ——— | Suction side:Perforated steel plate<br>Discharge side:Paper element |



APERÇU — Engine Manual — fichier complet disponible après achat

| ENGINE MODEL | | UNIT | 6CXM-GTE |
|---|---|---|---|
| Cooling water system | Sea water pump | —— | Rubber impeller type:gear driving type |
| | Fresh water pump | —— | Centrifugal type:V-belt driving type |
| | Cooling | —— | Water cooling |
| | Pump discharge volume | ℓ/hr | Sea water: ≥10300<br>(at crank shaft speed 2750 rpm)<br>Fresh water: ≥22700<br>(at crank shaft speed 2750 rpm) |
| | Fresh water capacity inside engine | ℓ | 35 |
| | Fresh water capacity in subtank | ℓ | 1.5 |
| Turbocharger | Type | —— | HX50(Holset make) |
| | Cooling | —— | Water cooling |
| | Lubrication | —— | Common with engine |
| Air cooler | Type | —— | Fin tube type |
| | Cooling | —— | Sea water cooling |
| Engine dimension:<br>Overall length×overall width×overall hight | | mm | 1190×805×905 |
| Piston stroke height (from installation floor) | | mm | 800 (from back plate of damper rubber) |
| Engine dry mass | | kg | 840 |

***Note*** Max.rating: Continuous operation hours at Max. bellow 0.5 hours.



APERÇU — Engine Manual — fichier complet disponible après achat 

# 3 Disassembly and Reassembly

## 3.1 Preparations before Disassembly and Reassembly

### 3.1.1 Disassembly

(1) Prepare the disassembly tools, measuring devices and record forms.
(2) Prepare the cleaning machine and cleaning cans.
(3) Prepare a place for putting parts and parts containers.
(4) Extract cooling water and lube oil.
(5) Put the disassembled parts in order.
(6) Return bolts and nuts to their original positions temporarily to avoid confusion with different bolt and nut types.
(7) Locate the cause of trouble accurately before disassembly, and do not remove or disassemble unnecessary parts.

### 3.1.2 Reassembly

(1) Clean and inspect the disassembled parts completely.
(2) Apply clean engine oil to the sliding and rotational parts before installation.
(3) Replace all gaskets and O-rings.
(4) Apply liquid packing to the necessary parts to prevent water or oil leakage.
(5) Check and ensure the correct oil and thrust clearance during reassembly.
(6) Install the parts according to the alignment marks when they are provided. Take care of the combination of the parts with selective engagement.
(7) Do not mix up bolts, nuts and washers. Tighten the major bolts and nuts to the specified tightening torque. Take special care when tightening alluminum alloy parts.
(8) Apply engine oil to the threads and seat of the major bolts and tighten them to the specified tightening torque.



APERÇU — Engine Manual — fichier complet disponible après achat 

## 3.2 Tools and Agent

**Tools(to be specially ordered)**

| Name of tool | Code No. | Shape |
|---|---|---|
| Socket(for rod bolt) | 127610-92730 |  |
| Extractor for valve guide | 127411-92160 |  |
| Extractor for fuel oil valve | 127616-92500 | |
| Piston insertion tool | 122310-92140 | 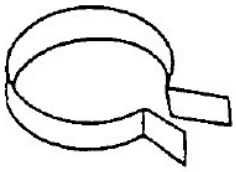 |
| Piston rings fitting/removal tool | 135410-92140 |  |
| Oil pan potitioning tool | 1. Bolt (4pcs) 127610-92700<br>2. Spacers A 127610-92680<br>3. Spacers B 127610-92690 | 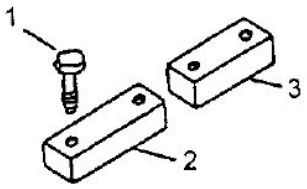 |
| Fresh water pump impeller (cam gear puller) (Press-fitting type) | 1. Spacer 127610-92430<br>2. Bolt 124160-77511<br>3. Bolt (for impeller) × 2 26116-060302<br>4. Bolt (for cam gear) × 2 26116-080502 | 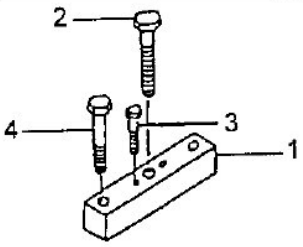 |
| Automatic timer tool (adiabatic material puller) | 158591-54120<br>158591-54200 | 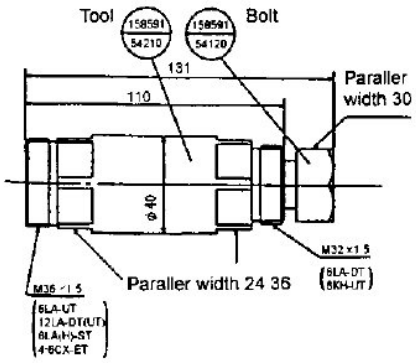 |
| Adiabatic material puller | 127610-92910 (Standard) | 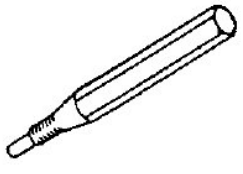 |



APERÇU — Engine Manual — fichier complet disponible après achat 

| Name of tool | Code No. | Shape |
|---|---|---|
| Protector puller | 127695-92910 | 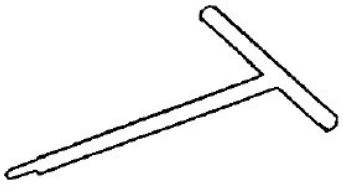 |
| Stem seal insertion tool | —— | 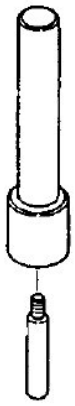 |
| Valve guide puller | —— | 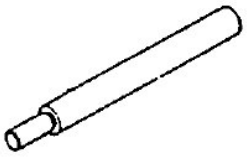 |
| Exhaust manifold puller | —— | 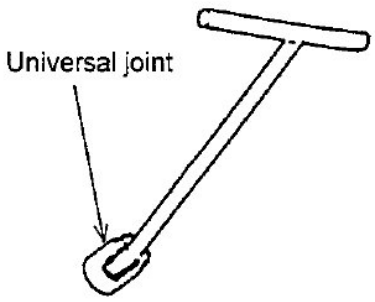 |
| Fuel valve puller tool<br>127616-92500 | 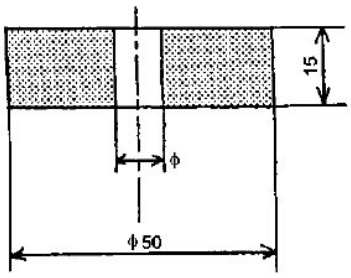 | 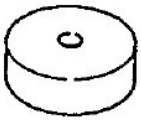 |



APERÇU — Engine Manual — fichier complet disponible après achat 

## Agent (to be used at maintenance)

| Name | | For using | | |
|---|---|---|---|---|
| Liquid packing (THREEBOND auxiliary packing): | | The silver grey semi-dry type viscoelastic liquid packing based on extreme heat-resisting synthetic rubber and synthetic resin. Apply the packing to the seal surface and join the part after serveral minutes when the packing has become semi-dry.<br>The white liquid packing based on nylon resin. Brush the packing on the seal surface and join the part after several minutes when the packing has become semi-dry.<br>Be sure to stir well before use. | | |
| White paint | | Coat the paint on the contact area with the cylinder body before inserting the cylinder liner to prevent rust and water leakage. (Use the oil type make-up paint.) | | |
| Name | | Quantity | Code No. | Note |
| Scale removing agent | UNICON | 1 case (4kg×4) | 974100-01460 | The strong scaling agent removes scale quickly(1-10 hrs.).<br>Dissolve the agent in 10 parts of water or seawater(by weight ratio) and stir it well.<br>Scale can be removed by just immersing the disassembled parts. To speed up the treatment, stir the solution. When the cleaning performance drops, neutralize the solution and throw it away. |
| | Counteragent (caustic soda) | 1 case (2kg×4) | 974100-0200 | |
| | PH test paper | ——— | 974100-04200 | |
| Anti-rust agent | | 2 ℓ | 974100-04200 | Mix the agent in ten parts of fresh water and stir the solution by operating the engine for about 5 minites. The anti-rust performance lasts for about 6 months. |
| Yanmar Super Freeze | | | | Can be used both as anti-freeze in winter and coolant in summer.<br>The performance lasts for 2 years.<br>The Super Freeze can safety be mixed withanti-rust agent. |

| Temp. | -5℃ | -10℃ | -15℃ | -20℃ | -25℃ | -30℃ | -35℃ | -40℃ |
|---|---|---|---|---|---|---|---|---|
| Volume ratio | 15% | 25% | 30% | 35% | 40% | 45% | 50% | 55% |



APERÇU — Engine Manual — fichier complet disponible après achat