POWER UNIT

CONTENTS

RING GEAR COVER AND AIR INTAKE SILENCER CASE 6- 2
REMOVAL 6- 2
INSTALLATION 6- 2
COLLECTOR ASSEMBLY (For multi-stage induction model) 6- 3
REMOVAL 6- 3
SYSTEM INSPECTION 6- 4
INSTALLATION 6- 5
COLLECTOR ASSEMBLY (For single-stage induction model) 6- 6
REMOVAL 6- 6
INSTALLATION 6- 7
CYLINDER HEAD COVER 6- 8
REMOVAL 6- 8
INSTALLATION 6-10
POWER UNIT 6-12
REMOVAL 6-12
INSTALLATION 6-18
OIL PUMP 6-23
REMOVAL 6-23
DISASSEMBLY 6-24
INSPECTION 6-25
MEASURING PUMP COMPONENTS 6-25
ASSEMBLY 6-26
INSTALLATION 6-27
TIMING CHAIN (VVT model) 6-28
REMOVAL 6-28
INSPECTION 6-32
INSTALLATION 6-34
TIMING CHAIN (Non-VVT model) 6-41
REMOVAL 6-41
INSPECTION 6-45
INSTALLATION 6-47
CYLINDER HEAD ASSEMBLY 6-54
REMOVAL 6-54
ASSEMBLY 6-56
DISASSEMBLY 6-61
INSPECTION/SERVICING 6-62
REASSEMBLY 6-72
CYLINDER/CRANKSHAFT/PISTON 6-74
DISASSEMBLY 6-74
INSPECTION/SERVICING 6-77
REASSEMBLY 6-89
THERMOSTAT 6-96
REMOVAL 6-96
INSPECTION 6-96
INSTALLATION 6-97
OPERATION 6-98
ENGINE LUBRICATION SYSTEM 6-98
WATER COOLING SYSTEM 6-100
PCV SYSTEM 6-101

6

APERÇU — Engine Manual — fichier complet disponible après achat 1/10

RING GEAR COVER AND AIR INTAKE SILENCER CASE

REMOVAL

Prior to removing Ring gear cover:
- **Disconnect battery cables from battery.**

1. Loosen the clamp securing breather hose ①, then remove the breather hose from silencer case ②.

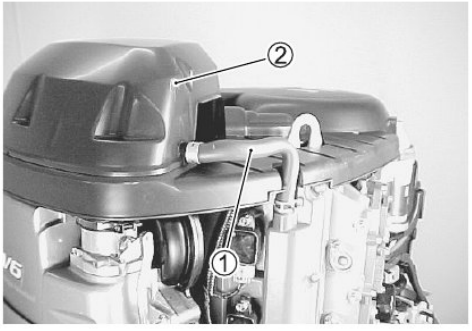

2. Loosen the clamps ③ securing STBD and PORT outlet tube to throttle body ④.



3. Remove the three (3) bolts securing ring gear cover ⑤.

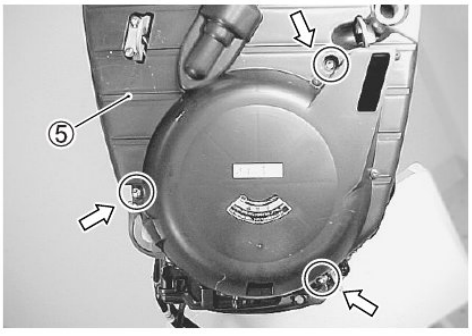

4. Raise the ring gear cover and air intake silencer case ⑤ slightly and remove the intake air temp. sensor ⑥ and purge valve hose ⑦ from air intake silencer case.
   Continue raising and remove the cover and case.

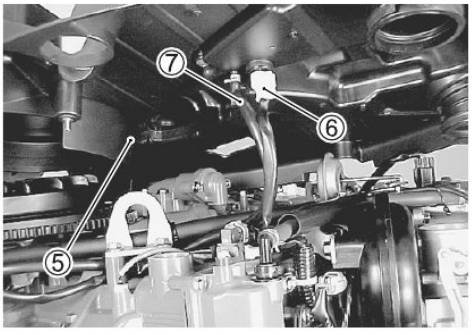

INSTALLATION

Installation is reverse order of removal.

APERÇU — Engine Manual — fichier complet disponible après achat

COLLECTOR ASSEMBLY

(For multi-stage induction model)

REMOVAL

Before removing collector assembly:
- **Disconnect battery cables from battery.**
- **Remove both side covers. (See page 7-2.)**

1. Remove the ring gear cover and air intake silencer case ①. (See page 6-2.)

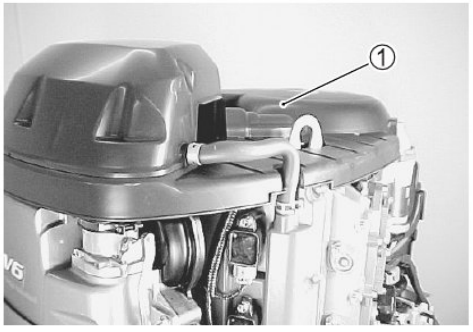

2. On the PORT side bank:
   Loosen the clamp securing PCV hose ②, then remove the PCV hose from collector cover.
3. Disconnect MAP sensor lead wire connector at MAP sensor ③.
4. Disconnect Throttle sensor lead wire connector from TPS (Throttle Position Sensor) ④.
5. Disconnect IAC valve lead wire connector at IAC valve ⑤.

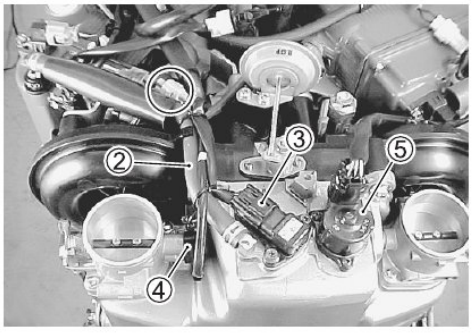

6. Remove two (2) screws ⑥ and cable bracket ⑦.
   Remove throttle cables ⑧ from throttle drum ⑨.

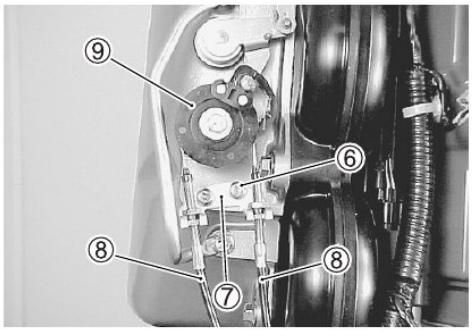

7. Remove the vacuum hose ⑪ from vacuum chamber ⑩.

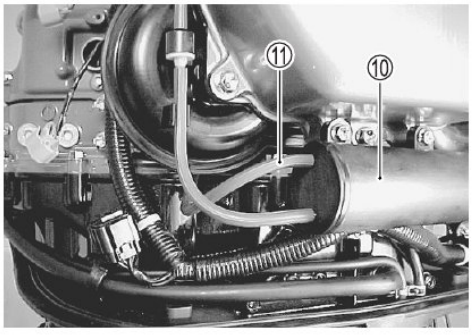

APERÇU — Engine Manual — fichier complet disponible après achat

8. Remove the seven (7) bolts and two (2) nuts securing collector cover ⑫, then remove the collector cover.

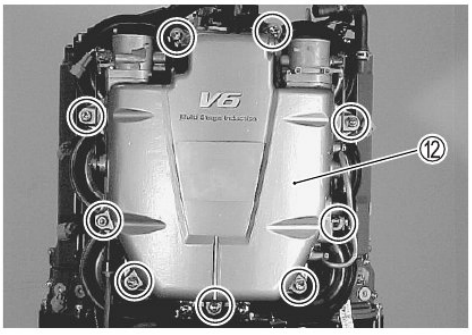

9. Remove the four (4) bolts and two (2) nuts securing funnel bracket ⑬, then remove six funnels ⑭ and funnel bracket.

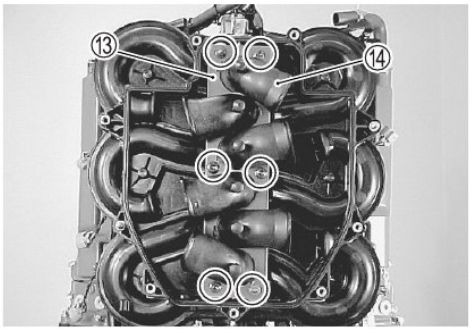

10. Disconnect lead wire connector from VSV (Vacuum Switching Valve) ⑮.



11. Remove four (4) bolts and collector ⑯.

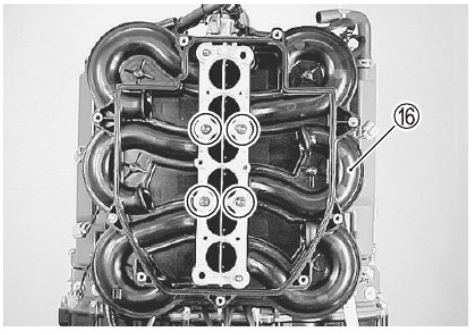

SYSTEM INSPECTION

Refer to “Multi-stage induction system/inspection” in section 3.

APERÇU — Engine Manual — fichier complet disponible après achat

INSTALLATION

Installation is reverse order of removal with special attention to the following steps.

NOTE:
Do not re-use gasket. Always use a new gasket.

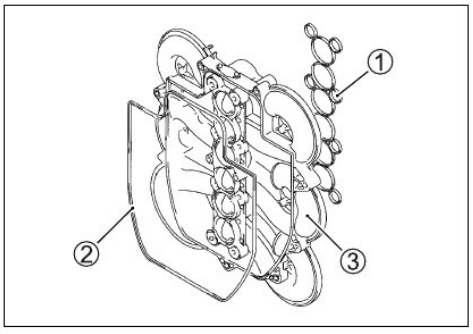

- Install gasket ①·② and collector ③, then tighten bolts, pre-coated with thread lock, to specified torque.

Collector bolt: 23 N·m (2.3 kg-m, 16.5 lb-ft)

1342 99000-32050: Thread lock "1342"

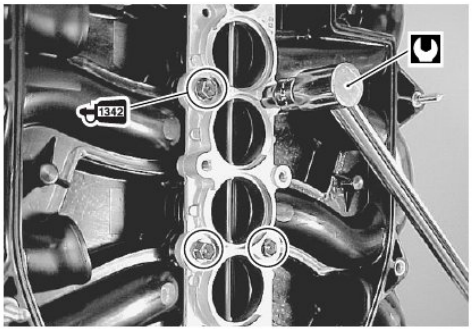

- Install funnels ④ and funnel bracket ⑤, then tighten bolts and nuts securely.

Funnel bracket bolt/nut: 23 N·m (2.3 kg-m, 16.5 lb-ft)

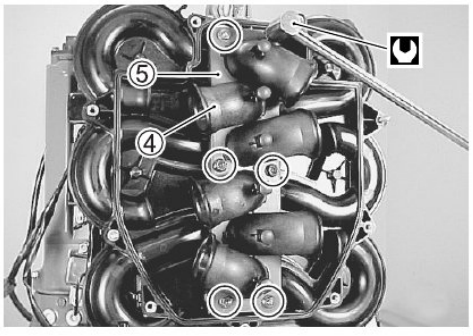

- Check to ensure that all removed parts are back in place.

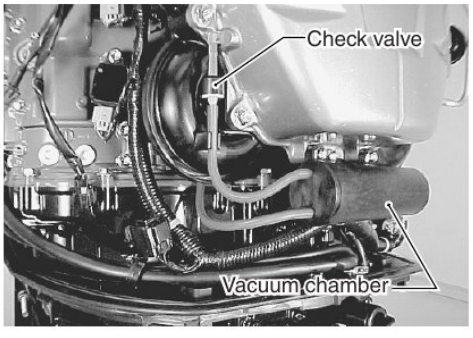

NOTE:
Refer to figure at right when connecting check valve between vacuum hoses.

① Check valve ② Orange side
③ Black side ④ To vacuum chamber
⑤ From collector assembly

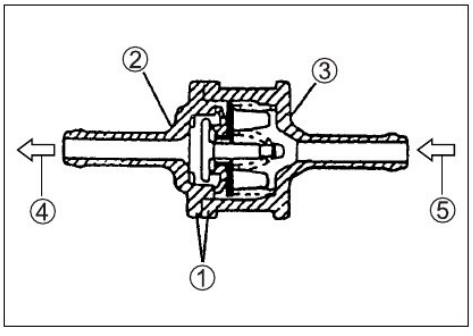

APERÇU — Engine Manual — fichier complet disponible après achat 5/10

COLLECTOR ASSEMBLY

(For single-stage induction model)

REMOVAL

Before removing collector assembly:
- **Disconnect battery cables from battery.**
- **Remove both side covers. (See page 7-2.)**

1. Remove the ring gear cover and air intake silencer case ①. (See page 6-2.)

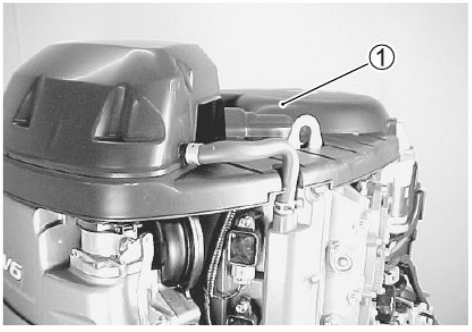

2. On the PORT side bank:
   Loosen the clamp securing PCV hose ②, then remove the PCV hose from collector cover.
3. Disconnect MAP sensor lead wire connector at MAP sensor ③.
4. Disconnect Throttle sensor lead wire connector from TPS (Throttle Position Sensor) ④.
5. Disconnect IAC valve lead wire connector at IAC valve ⑤.

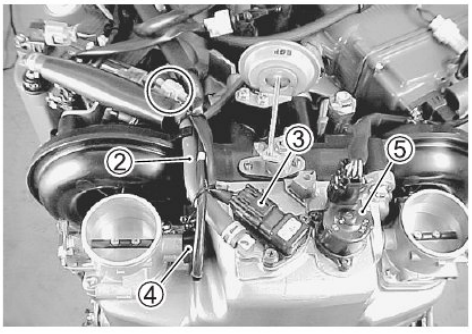

6. Remove two (2) screws ⑥ and cable bracket ⑦.
   Remove throttle cable ⑧ from throttle drum ⑨.

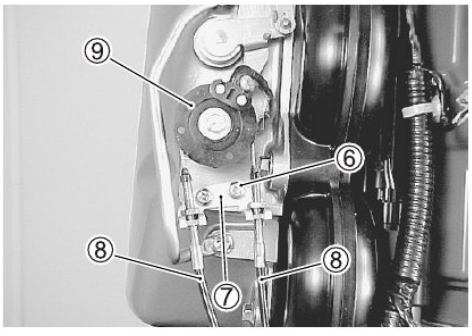

7. Remove the seven (7) bolts and two (2) nuts securing collector cover ⑩, then remove the collector cover.

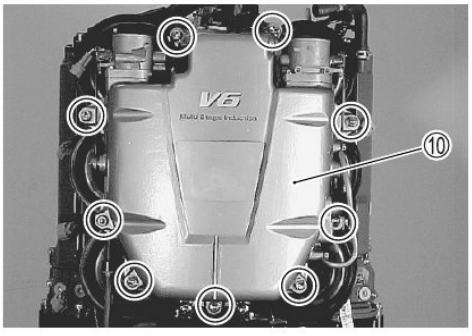

APERÇU — Engine Manual — fichier complet disponible après achat

8. Remove the six (6) bolts and two (2) nuts securing collector ⑪, then remove collector.

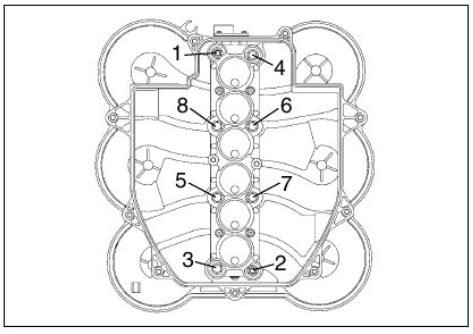

INSTALLATION

Installation is reverse order of removal with special attention to the following steps.

NOTE:
Do not re-use gasket. Always use a new gasket.

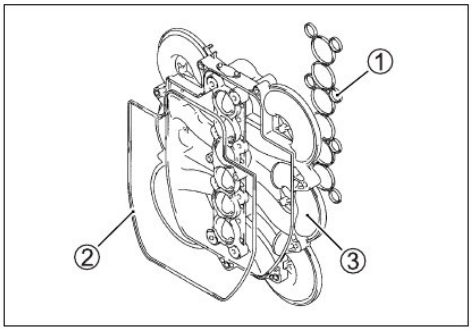

- Install gasket ①·② and collector ③, then tighten bolts and nut, pre-coated with thread lock, to specified torque.

Collector bolt: 23 N·m (2.3 kg-m, 16.5 lb-ft)

1342 99000-32050: Thread lock "1342"

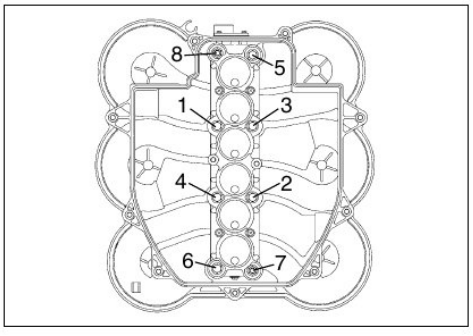

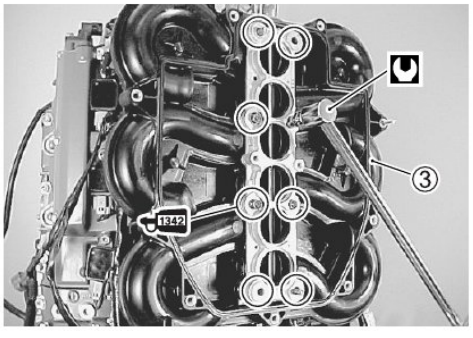

- Check to ensure that all removed parts are back in place.



APERÇU — Engine Manual — fichier complet disponible après achat

CYLINDER HEAD COVER

REMOVAL

Before removing cylinder head cover:
- **Disconnect battery cables from battery.**

1. Remove the collector assembly. (See page 6-3, 6-6.)
2. Disconnect ignition coil connectors ①.
   Remove the bolts securing the ignition coils.
   Remove all ignition coils ② and spark plugs.

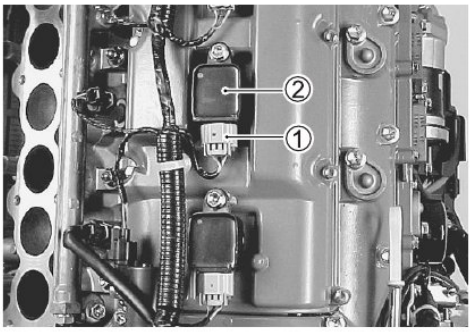

3. On the PORT side bank:
   - Disconnect EX. manifold temperature sensor lead wire connector ③.
   - On DF250 model, disconnect EX. CMP sensor lead wire connector ④ at sensor.
   - On DF250 model, disconnect IN. CMP sensor lead wire connector ⑤ at sensor.
   - Remove the bolt securing lead wire clamp plate ⑥.
   - Remove PCV valve ⑦ from cylinder head cover.

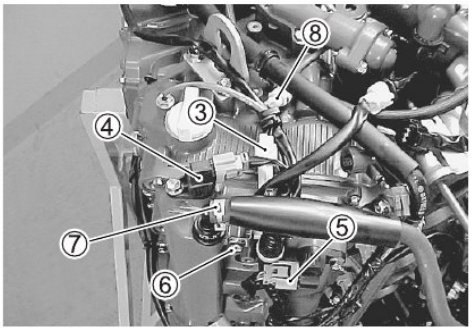

   - Disconnect cylinder temperature sensor lead wire connector ⑧.
   - On DF250 model, disconnect OCV lead wire connector ⑨ at OCV.
     Remove the four (4) bolts securing OCV ⑩, then remove OCV and discard OCV gasket ⑪.
   - Remove the bolt securing lead wire clamp plate ⑫.

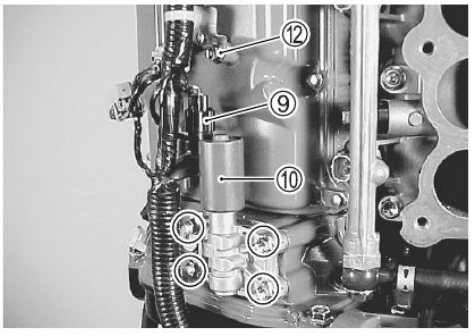

NOTE:
DF200/225 models are not equipped with OCV.

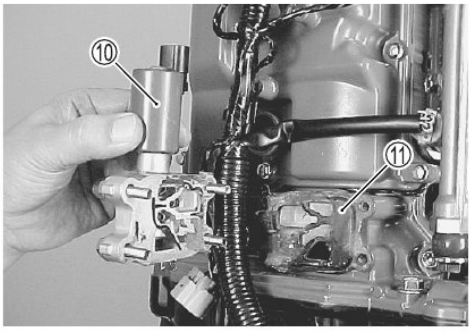

APERÇU — Engine Manual — fichier complet disponible après achat

- Remove the eleven (11) bolts securing cylinder head cover ⑬ to the cylinder head, then remove the cylinder head cover.

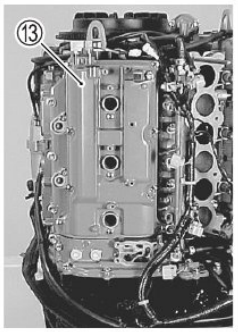

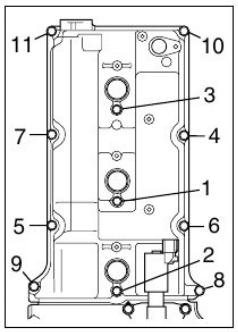

4. On the STBD side bank:
   - Disconnect EX. manifold temperature sensor lead wire connector ①.
   - Disconnect IN. CMP sensor lead wire connector ② at sensor.
   - Remove the bolt securing lead wire clamp plate ③.

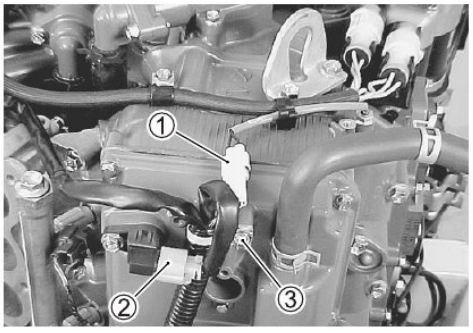

   - On DF250 model, disconnect OCV lead wire connector ④ at OCV.
     Remove the four (4) bolts securing OCV ⑤, then remove OCV and discard OCV gasket ⑥.
   - Remove the bolt securing lead wire clamp plate ⑦.

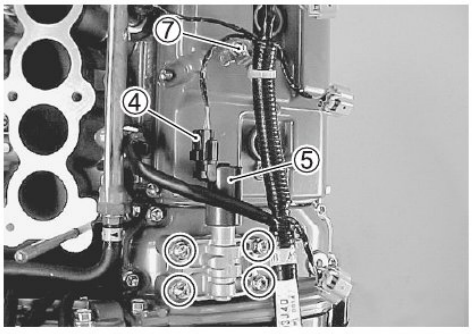

NOTE:
DF200/225 models are not equipped with OCV.

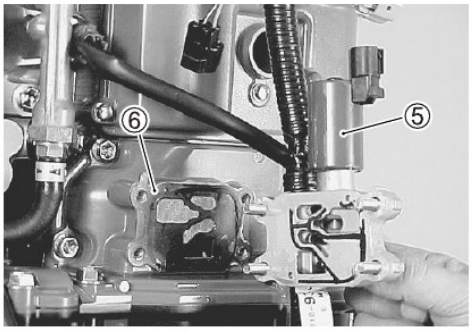

   - Remove the eleven (11) bolts securing cylinder head cover ⑧ to the cylinder head, then remove the cylinder head cover.

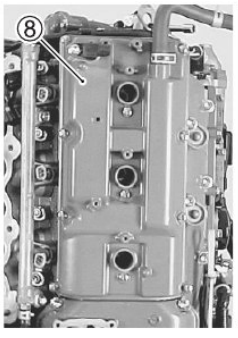

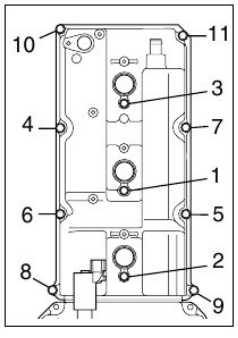

APERÇU — Engine Manual — fichier complet disponible après achat

INSTALLATION

Installation is reverse order of removal with special attention to the following steps.

- Clean sealing surfaces on cylinder heads and covers.
- Remove oil, old sealant, and dust from sealing surfaces.
- After cleaning, apply sealant to cylinder heads sealing surface area as shown in figure.

1207B 99000-31140: SUZUKI BOND "1207B"

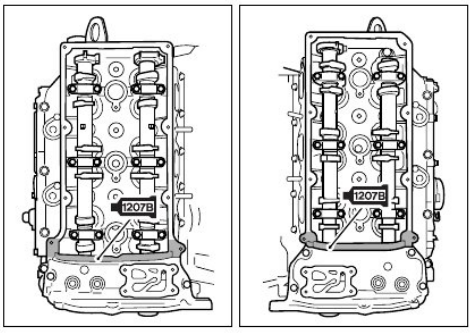

- Install new cylinder head cover gasket ① to head cover.

NOTE:
Examine cylinder head cover gasket for damage.
Always replace gasket with new one.

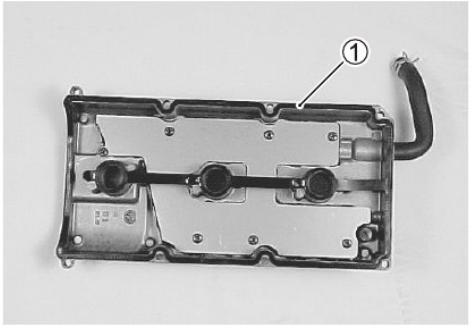

- Install cylinder head covers ② to cylinder heads, then tighten cylinder head cover bolts to specified torque.

Cylinder head cover bolt: 11 N·m (1.1 kg-m, 8.0 lb-ft)

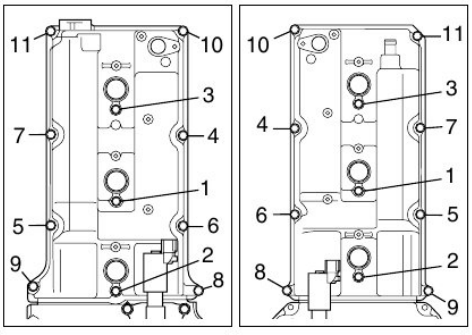

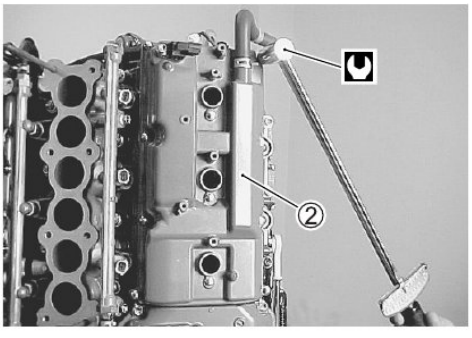

APERÇU — Engine Manual — fichier complet disponible après achat