FOREWORD

This manual contains an introductory description of the SUZUKI DF150/175 Outboard motors and procedures for inspection, service and overhaul of their main components.
General knowledge information is not included.

Please read the GENERAL INFORMATION section to familiarize yourself with basic information concerning this motor. Read and refer to the other sections in this manual for information regarding proper inspection and service procedures.

This manual will help you better understand these outboard motors, assisting you in providing your customers with optimum and quick service.

- *This manual has been prepared using the latest information available at the time of publication.*
  Differences may exist between the content of this manual and the actual outboard motor.
- *Illustrations in this manual are used to show the basic principles of operation and work procedures and may not represent the actual outboard motor in exact detail.*
- *This manual is intended for use by technicians who already possess the basic knowledge and skills to service SUZUKI outboard motors.*
  Persons without such knowledge and skills should not attempt to service SUZUKI outboard engines by relying on this manual only and should contact an authorized SUZUKI outboard motor dealer.

⚠ WARNING

Apprentice mechanics or do-it-yourself mechanics that don't have the proper tools and equipment may not be able to properly perform the services described in this manual.
Improper repair may result in injury to the mechanic and may render the engine unsafe for the boat operator and passengers.

NOTE:
This manual is compiled based on 2006 (K6) model.

GROUP INDEX

GENERAL INFORMATION	1
PERIODIC MAINTENANCE	2
ENGINE CONTROL SYSTEM	3
ENGINE ELECTRICAL	4
FUEL SYSTEM	5
POWER UNIT	6
MID UNIT	7
POWER TRIM AND TILT	8
LOWER UNIT [Standard rotation (Right-hand) model]	9
LOWER UNIT [Counter rotation (Left-hand) model]	10
WIRE/HOSE ROUTING	11

© COPYRIGHT SUZUKI MOTOR CORPORATION 2005

Marine & Power Products Division

HOW TO USE THIS MANUAL

TO LOCATE WHAT YOU ARE LOOKING FOR:

1. The text of this manual is divided into sections.
2. The section titles are listed on the previous page in a GROUP INDEX. Select the section needed for reference.
3. Holding the manual as shown at the right will allow you to find the first page of the section easily.
4. The first page of each section contains a table of contents to easily locate the item and page you need.

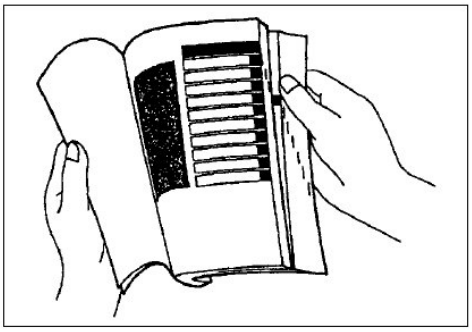

COMPONENT PARTS AND IMPORTANT ITEM ILLUSTRATIONS

Under the name of each system or unit, an exploded view is provided with work instructions and other service information such as the tightening torque, lubrication and locking agent points.

Example:

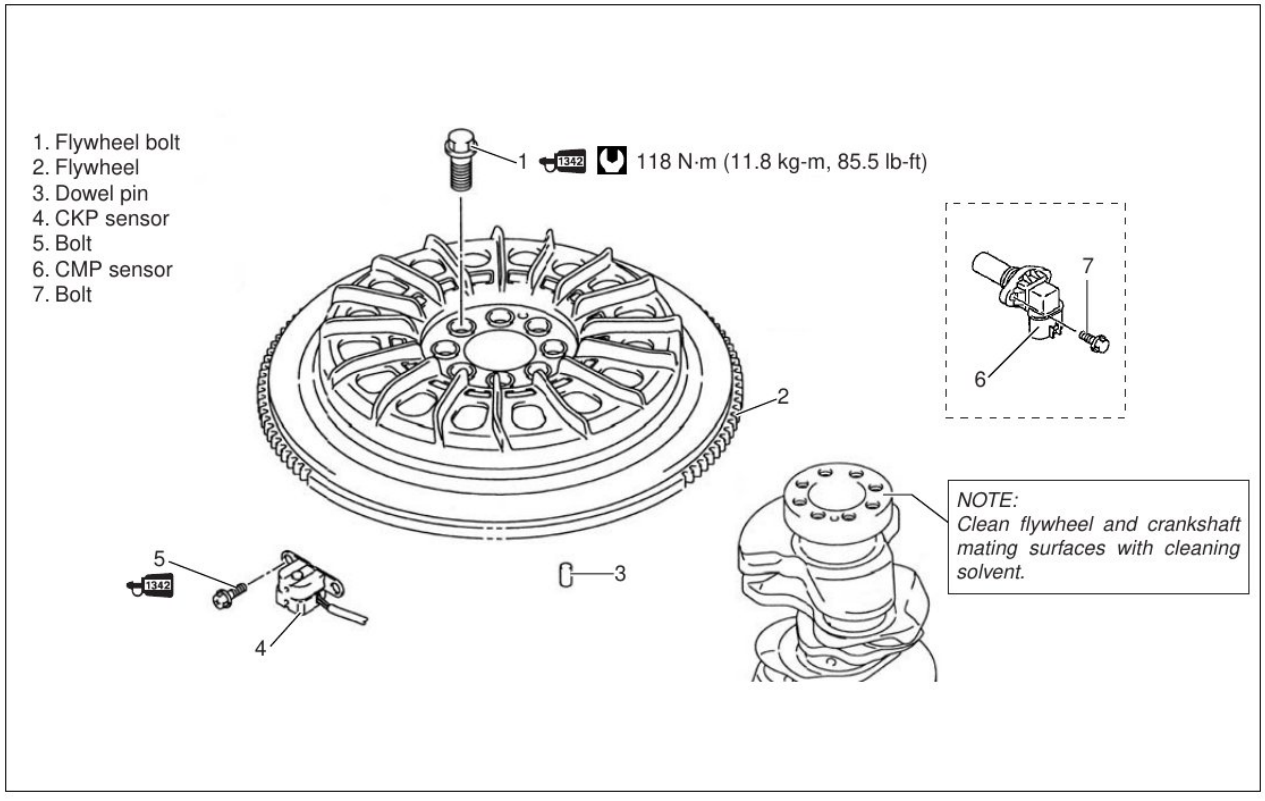

SYMBOL

Listed in the table below are the symbols indicating instructions and other important information necessary for proper servicing. Please note the definition for each symbol. You will find these symbols used throughout this manual. Refer back to this table if you are not sure of any symbol(s) meanings.

SYMBOL	DEFINITION	SYMBOL	DEFINITION
	Torque control required. Data beside it indicates specified torque.		Apply SUZUKI SILICONE SEAL.
	Apply oil. Use the engine oil unless otherwise specified.		Apply THREAD LOCK “1342”.
	Apply molybdenum oil solution. (Mixture of engine oil and SUZUKI MOLY PASTE in a ratio of 1 : 1)		Apply THREAD LOCK SUPER “1333B”.
	Apply SUZUKI OUTBOARD MOTOR GEAR OIL.		Measure in DC voltage range.
	Apply SUZUKI SUPER GREASE “A”.		Measure in resistance range.
	Apply SUZUKI MOLY PASTE. 99000-25140		Measure in continuity test range.
	Apply SUZUKI WATER RESISTANT GREASE.		Use peak voltmeter “Stevens CD-77”.
	Apply SUZUKI BOND “1104”.		Use special tool.
	Apply SUZUKI BOND “1207B”.		

ABBREVIATIONS

Abbreviations used in this service manual are as follows:

BTDC : Before Top Dead Center

CKP : Crankshaft position
CMP : Camshaft position
CTP : Close Throttle position

DC : Direct Current
DOHC : Double Over Head Camshaft

ECM : Engine Control Module
EX (Ex.) : Exhaust

IAC : Idle Air Control
IAT : Intake Air Temperature
IN (In.) : Intake

MAP : Manifold absolute pressure

OCV : Oil control valve

PORT : Port
PTT : Power Trim & Tilt

SPS : Shift Position Sensor
STBD : Starboard

TPS : Throttle Position Sensor

VSV : Vacuum switching valve
VVT : Variable Valve Timing

GENERAL INFORMATION

1

CONTENTS

WARNING/CAUTION/NOTE 1- 2
GENERAL PRECAUTIONS 1- 2
IDENTIFICATION NUMBER LOCATION 1- 4
FUEL AND OIL 1- 5
GASOLINE RECOMMENDATION 1- 5
ENGINE OIL 1- 5
ENGINE BREAK-IN 1- 6
WARM-UP RECOMMENDATION 1- 6
THROTTLE RECOMMENDATION 1- 6
PROPELLERS 1- 7
POWERHEAD DIRECTION OF ROTATION 1- 8
CYLINDER NUMBER 1- 8
SPECIFICATIONS 1- 9
SERVICE DATA 1-12
TIGHTENING TORQUE 1-20
SPECIAL TOOLS 1-22
MATERIALS REQUIRED 1-26

WARNING/CAUTION/NOTE

Please read this manual and follow its instructions carefully. To emphasize special information, the symbol and the words WARNING, CAUTION and NOTE have special meanings. Pay special attention to the messages highlighted by these signal words.

⚠ WARNING

Indicates a potential hazard that could result in death or injury.

CAUTION

Indicates a potential hazard that could result in motor damage.

NOTE:
Indicates special information to make maintenance easier or instructions clearer.

Please note, however, that the warnings and cautions contained in this manual cannot possibly cover all potential hazards relating to the servicing, or lack of servicing, of the outboard motor. In addition to the WARNING and CAUTION stated, you must also use good judgment and observe basic mechanical safety principles.

GENERAL PRECAUTIONS

⚠ WARNING

- **Proper service and repair procedures are important for the safety of the service mechanic and the safety and reliability of the outboard motor.**
- **To avoid eye injury, always wear protective goggles when filing metals, working on a grinder, or doing other work, which could cause flying material particles.**
- **When two or more persons work together, pay attention to the safety of each other.**
- **When it is necessary to run the outboard motor indoors, make sure that exhaust gas is vented outdoors.**
- **When testing an outboard motor in the water and on a boat, ensure that the necessary safety equipment is on board. Such equipment includes: flotation aids for each person, fire extinguisher, distress signals, anchor, paddles, bilge pump, first aid kit, emergency starter rope, etc.**
- **When working with toxic or flammable materials, make sure that the area you work in is well ventilated and that you follow all of the material manufacturer's instructions.**
- **Never use gasoline as a cleaning solvent.**
- **To avoid getting burned, do not touch the engine, engine oil or exhaust system during or shortly after engine operation.**
- **Oil can be hazardous. Children and pets may be harmed from contact with oil. Keep new and used oil away from children and pets. To minimize your exposure to oil, wear a long sleeve shirt and moisture-proof gloves (such as dishwashing gloves) when changing oil. If oil contacts your skin, wash thoroughly with soap and water. Launder any clothing or rags if wet with oil. Recycle or properly dispose of used oil.**
- **After servicing fuel, oil/engine cooling system and exhaust system, check all lines and fittings related to the system for leaks.**
- **Carefully adhere to the battery handling instructions laid out by the battery supplier.**

CAUTION

- **If parts replacement is necessary, replace the parts with Suzuki Genuine Parts or their equivalent.**
- **When removing parts that are to be reused, keep them arranged in an orderly manner so that they may be reinstalled in the proper order and orientation.**
- **Be sure to use special tools where instructed.**
- **Make sure that all parts used in assembly are clean and also lubricated when specified.**
- **When use of a certain type of lubricant, bond or sealant is specified, be sure to use the specified type.**
- **When removing the battery, disconnect the negative cable first and then the positive cable. When reconnecting the battery, connect the positive cable first and then the negative cable.**
- **When performing service to electrical parts, if the service procedures do not require using battery power, disconnect the negative cable at the battery.**
- **Tighten cylinder head and case bolts and nuts, beginning with larger diameter and ending with smaller diameter. Always tighten from inside to outside diagonally to the specified tightening torque.**
- **Whenever you remove oil seals, gaskets, packing, O-rings, locking washers, locking nuts, cotter pins, circlips, and certain other parts as specified, always replace them with new. Also, before installing these new parts, be sure to remove any left over material from the mating surfaces.**
- **Never reuse a circlip. When installing a new circlip, take care not to expand the end gap larger than required to slip the circlip over the shaft. After installing a circlip, always ensure that it is completely seated in its groove and securely fitted.**
- **Use a torque wrench to tighten fasteners to the torque values when specified.**
- **Remove grease or oil from screw/bolt threads unless a lubricant is specified.**
- **After assembly, check parts for tightness and operation.**

- **To protect the environment, do not unlawfully dispose of used motor oil, other fluids and batteries.**
- **To protect the Earth's natural resources, properly dispose of used motor parts.**

IDENTIFICATION NUMBER LOCATION

MODEL, PRE-FIX, SERIAL NUMBER

The MODEL, PRE-FIX and SERIAL NUMBER of motor are stamped on a plate attached to the clamp bracket.

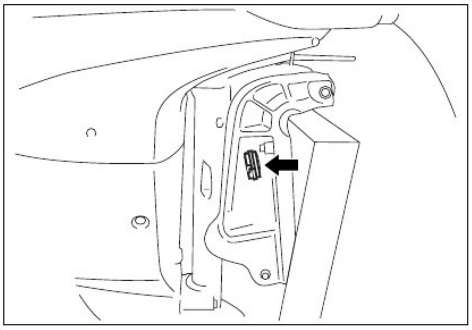

Example

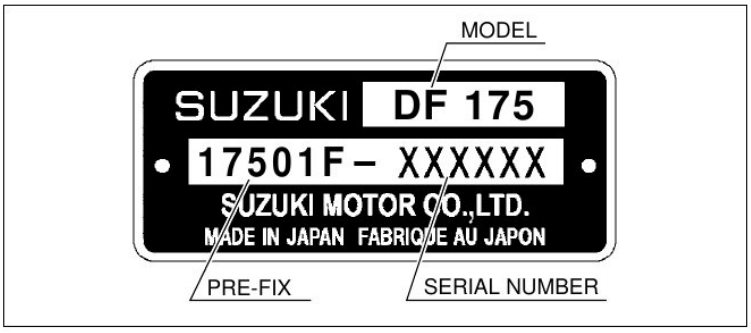

ENGINE SERIAL NUMBER

A second engine serial number plate is pressed into a boss on the cylinder block.

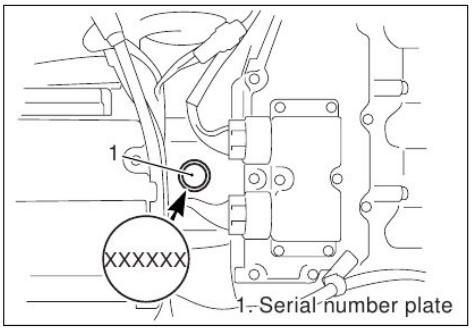

FUEL AND OIL

GASOLINE RECOMMENDATION

Suzuki highly recommends that you use alcohol-free unleaded gasoline with a minimum pump octane rating of 87 (R/2+M/2 method) or 91 (Research method). However, blends of unleaded gasoline and alcohol with equivalent octane content may be used.

Allowable maximum blend of a single additive (not combination):

5% Methanol, 10% Ethanol, 15% MTBE

CAUTION

If leaded gasoline is used, engine damage may result. Use only unleaded gasoline.

ENGINE OIL

Use only oils that are rated SE, SF, SG, SH or SJ under the API (American Petroleum Institute) classification system or NMMA FC-W classification system.

The viscosity rating should be SAE (or NMMA FC-W) 10W-40.

If SAE (or NMMA FC-W) 10W-40 motor oil is not available, select an alternative according to the chart at right.

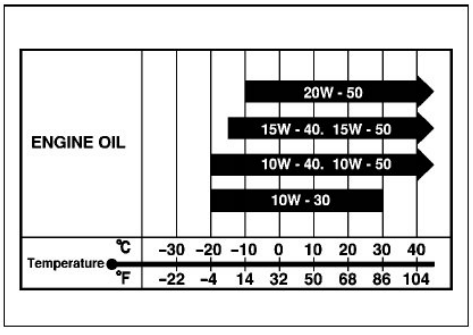

ENGINE BREAK-IN

The first 10 hours are critically important to ensure correct running of either a brand new motor or a motor that has been reconditioned or rebuilt. How the motor is operated during this time will have direct bearing on its life span and long-term durability.

Break-in period: 10 hours

WARM-UP RECOMMENDATION

Allow sufficient idling time (more than 5 minutes) for the engine to warm up after cold engine starting.

THROTTLE RECOMMENDATION

NOTE:
Avoid maintaining a constant engine speed for an extended period at any time during the engine break-in by varying the throttle position occasionally.

1. FIRST 2 HOURS
   For the first 15 minutes, operate the engine in-gear at idling speed.
   During the remaining 1 hour and 45 minutes, operate the engine in-gear at less than 1/2 (half) throttle (3 000 r/min).

NOTE:
The throttle may be briefly opened beyond the recommended setting to plane the boat, but must be reduced to the recommended setting immediately after planning.

2. NEXT 1 HOUR
   Operate the engine in-gear at less than 3/4 (three-quarter) throttle (4 000 r/min).

3. LAST 7 HOURS
   Operate the engine in-gear at desired engine speed.
   However, do not operate continuously at full throttle for more than 5 minutes.