Service Manual Outline

SECTION 1 - Important Information

- A - General Information
- B - Maintenance
- C - Troubleshooting

SECTION 2 - Removal and Installation

- A - MCM (Stern Drive) Models
- B - MIE (Inboard) Models

SECTION 3 - Engine

- A - All Models

SECTION 4 - Electrical Systems

- A - Starting System
- B - Glow Plug System
- C - Charging System
- D - Instrumentation
- E - Wiring Diagrams

SECTION 5 - Fuel System

- A - Fuel Delivery Pump and Fuel Filter
- B - Injection Pump
- C - Fuel Injectors

SECTION 6 - Cooling System

- A - Seawater Cooled Section
- B - Closed Cooled Section

SECTION 7 - Intake and Exhaust System

- A - Intercooler
- B - Intake / Exhaust System
- C - Turbocharger

SECTION 8 - Drive Systems

- A - Hurth Down Angle Transmission
- B - Hurth V-Drive Transmission
- C - Propeller Shaft Models

SECTION 9 - Power Steering

- A - Pump and Related Components

APERÇU — Engine Manual — fichier complet disponible après achat

Notice

Throughout this publication, “Dangers,” “Warnings” and “Cautions” are used to alert the mechanic to special instructions concerning a particular service or operation that may be hazardous if performed incorrectly or carelessly. Observe them carefully!

These “Safety Alerts” alone cannot eliminate the hazards that they signal. Strict compliance to these special instructions when performing the service, plus “common sense” operation, are major accident prevention measures.

⚠DANGER

DANGER - Immediate hazards which will result in severe personal injury or death.

⚠WARNING

WARNING - Hazards or unsafe practices which could result in severe personal injury or death.

⚠CAUTION

CAUTION - Hazards or unsafe practices which could result in minor personal injury or product or property damage.

Notice to Users of This Manual

This service manual has been written and published by the service department of Mercury Marine to aid our dealers, mechanics and company service personnel when servicing the products described herein.

It is assumed that these personnel are familiar with the servicing procedures of these products, of like or similar products manufactured and marketed by Mercury Marine, and that they have been trained in the recommended servicing procedures for these products which include the use of mechanic’s common hand tools and the special Mercury Marine or recommended tools from other suppliers.

We could not possibly know of and advise the service trade of all conceivable procedures by which a service might be performed and of the possible hazards and/or results of each method. We have not undertaken any such wide evaluation. Therefore, anyone who uses a service procedure and/or tool, which is not recommended by the manufacturer, first must completely satisfy himself that neither his nor the product’s safety will be endangered by the service procedure selected.

All information, illustrations and specifications contained in this manual are based on the latest product information available at time of publication.

It should be kept in mind, while working on the product, that the electrical system is capable of violent and damaging short circuits or severe electrical shocks. When performing any work where electrical terminals could possibly be grounded or touched by the mechanic, the battery cables should be disconnected at the battery.

Any time the intake or exhaust openings are exposed during service they should be covered to protect against accidental entrance of foreign material which could enter the cylinders and cause extensive internal damage when the engine is started.

It is important to note that, during any maintenance procedure, replacement fasteners must have the same measurements and strength as those removed, whether metric or customary. Numbers on the heads of the metric bolts and on surfaces of metric nuts indicate their strength. Customary bolts use radial lines for this purpose, while most customary nuts do not have strength markings. Mismatched or incorrect fasteners can result in damage or malfunction, or possible personal injury. Therefore, fasteners removed should be saved for re-use in the same locations whenever possible. Where the fasteners are not satisfactory for re-use, care should be taken to select a replacement that meets the same specifications as the original.

APERÇU — Engine Manual — fichier complet disponible après achat 2/10

Engine Mechanical Components

Many of the engine mechanical components are designed for marine applications. Unlike automotive engines, marine engines are subjected to extended periods of heavy load and wide-open-throttle operation and, therefore, require heavy-duty components. Special marine engine parts have design and manufacturing specifications which are required to provide long life and dependable performance. Marine engine parts also must be able to resist the corrosive action of salt or brackish water that will rust or corrode standard automotive parts within a short period of time.

Failure to use recommended Quicksilver service replacement parts can result in poor engine performance and/or durability, rapid corrosion of parts subjected to salt water and possibly complete failure of the engine.

Use of parts other than recommended service replacement parts, will void the warranty on those parts which are damaged as a result of the use of other than recommended replacement parts.

Replacement Parts

⚠ WARNING

Electrical and fuel system components on MerCruiser Engines and Stern Drives are designed and manufactured to comply with U.S. Coast Guard Rules and Regulations to minimize risks of fire or explosion.

Use of replacement electrical or fuel system components, which do not comply to these rules and regulations, could result in a fire or explosion hazard and should be avoided.

When servicing the electrical and fuel systems, it is extremely important that all components are properly installed and tightened. If not, any electrical component opening would permit sparks to ignite fuel vapors from fuel system leaks, if they existed.

APERÇU — Engine Manual — fichier complet disponible après achat

In-Line Diesel Models Covered in This Manual

MCM (Stern Drive) MODEL	SERIAL NUMBER
D3.0L/150	D0725150 and Above
D3.6L/180	D0850125 and Above
D4.2L/220	D0554730 and Above

MIE (Inboard) MODEL	SERIAL NUMBER
D3.0L/150	D0725150 and Above
D3.6L/180	D0850125 and Above
D4.2L/220	D0554730 and Above

NOTICE
Refer to appropriate “Stern Drive Service Manual” for Transom Assembly and Stern Drive Unit Repair.

APERÇU — Engine Manual — fichier complet disponible après achat 4/10

IMPORTANT INFORMATION

1

A

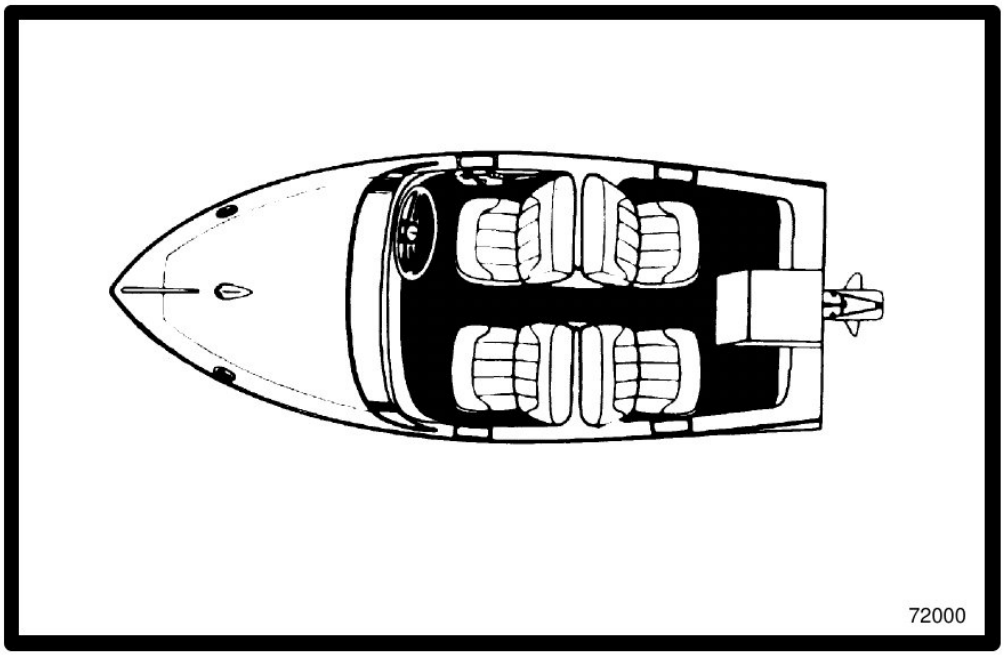

GENERAL INFORMATION

Note: Refer to the following Service Bulletins regarding this section.

SB 97-13	Service/Repair of Electrical Test Equipment
SB 96-13	Official Recall Notification Federal Boat Safety Act Commander 3000 Remote Control
SB 96-5	Troubleshooting Shift Problems
SB 95-2	Oildyne Trim Pump Adaptor Connectors
SB 91-14	Replacement Trim Pump for the Prestolite Style Pump

INDEX

Table of Contents

	Page
Introduction	1A-1
How to Use This Manual	1A-1
Page Numbering	1A-1
How to Read Parts Manual	1A-2
Directional References	1A-3
Engine Rotation	1A-3
Engine Serial Number and Identification Locations	1A-3
Propeller Information	1A-4
Water Testing New Engines	1A-4
Boat and Engine Performance	1A-5
Boat Bottom	1A-6
Marine Fouling	1A-6
Weight Distribution	1A-6
Water in Boat	1A-6
Elevation and Climate	1A-6
Recommended Operation/Duty Cycle	1A-7
Pre-Lubricating Turbocharger	1A-7

NOTICE

For information and procedures on troubleshooting, refer to SECTION 1C.

NOTICE

Refer to appropriate Stern Drive Service Manual for transom assembly and stern drive unit repair.

APERÇU — Engine Manual — fichier complet disponible après achat

Introduction

This comprehensive overhaul and repair manual is designed as a service guide for the models previously listed. It provides specific information, including procedures for disassembly, inspection, assembly and adjustment to enable dealers and service mechanics to repair and tune these engines.

Before attempting repairs, it is suggested that the procedure first be read through to gain knowledge of the methods and tools used and the cautions and warnings required for safety.

How to Use This Manual

This manual is divided into sections which represent major components and systems.

Some sections are further divided into parts which more fully describe the component.

Page Numbering

Two number groups appear at the bottom of each page. Following is an example and description.

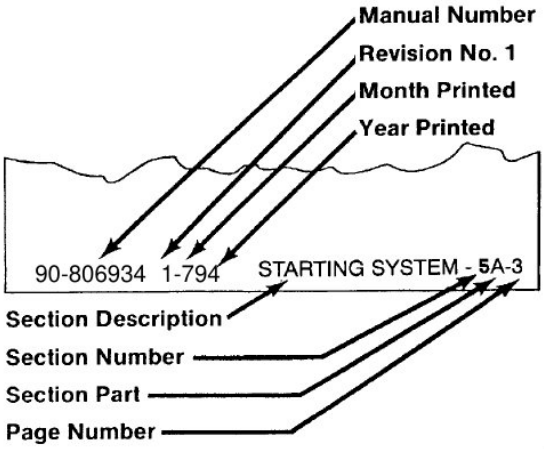

72426

APERÇU — Engine Manual — fichier complet disponible après achat

How to Read Parts Manual

NOTE: *The following is representative of a page from a MerCruiser Parts Manual and is not intended to be an actual page from a specific Parts Manual.*

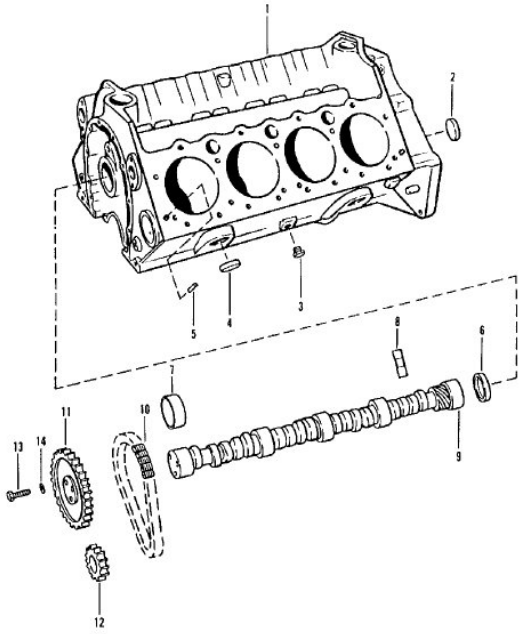

73287

M0033-D8

CYLINDER BLOCK AND CAMSHAFT

a PART NO.	b REF. NO.	c DESCRIPTION	d QUAN.
841-81631	1	CYLINDER BLOCK ASSEMBLY	1
N.S.S.	2	PLUG, expansion (1-1/4″) (GM #3738306)	2
22-87238	3	DRAIN COCK, cylinder block	2
19-34270	4	PLUG, expansion - cylinder block (1-5/8″ Diameter)	8
17-35465	5	PIN, dowel - block to head (5/16″ Diameter)	4
22-72640	6	PLUG, expansion - camshaft bearing hole	1
23-85674	7	BEARING UNIT, camshaft (set)	1
72638	8	LIFTER, hydraulic valve	16
431-5943	9	CAMSHAFT	1
35378	10	CHAIN, camshaft timing	1
43-35338	11	SPROCKET, camshaft timing	1
43-48338	12	SPROCKET, crankshaft timing	1
10-34505	13	BOLT, camshaft timing sprockets (3/4″)	3
12-39167	14	WASHER, camshaft timing sprocket bolt	3

e 841-8163 Cylinder Block Assembly includes only standard pistons, piston rings, crankshaft bearings and camshaft bearings.

A. **Part Number:** For part ordering - Note N.S.S. for Reference Number 2, Plug, expansion - that means Not Sold Separately by Mercury Marine; however, in this case, the G.M. Part Number (for the plug) is given in the Description Column.

B. **Reference Number:** For part shown on exploded parts view.

C. **Description:** This is the most important column because it gives:

1) Description of Part: Ref. No. 1 is a Cylinder Block Assembly, No. 9 is a Camshaft, etc.

2) What parts are included with a certain part: Notice how the Description of Part, for Ref. Nos. 1 and 8 through 14, are at the left side of the column. Description of Part for Ref. Nos. 2 through 7 are indented under “Cylinder Block Assembly.” If Ref. No. 1 (Cylinder Block Assembly) was ordered, all indented parts (Ref. Nos. 2 through 7) would come with the part. Ref. Nos. 8 through 14 would not come with Ref. No. 1 and would have to be ordered separately. If two Cylinder Blocks were listed, both cylinder blocks would come with the indented parts. In some cases, an indented part will have another part indented under it. The second indented part will come with the first indented part.

3) Serial number break: If serial number information is listed, check product serial number to ensure that correct part is ordered.

4) Special information: Many times special information will be shown after description, such as: L.H. Rotation, R.H. Rotation, Filter Up, Filter Down, etc. This will help in selecting the correct part.

D. **Quantity:** Quantity that has to be ordered.

E. **Special Information Block:** Additional information, part numbers for gasket sets, etc.

Directional References

Front of boat is bow; rear is stern. Starboard side is right side; port side is left side. In this maintenance manual, all directional references are given as they appear when viewing boat from stern looking toward bow.

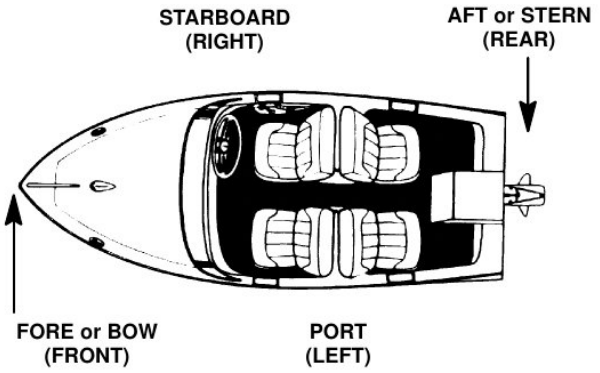

72000

Engine Rotation

Engine rotation is determined by observing flywheel rotation from the rear (stern end) of the engine looking forward (toward water pump end). Propeller rotation is not necessarily the same as engine rotation. When ordering replacement engine, short blocks or parts for engine, be certain to check engine rotation. Do not rely on propeller rotation in determining engine rotation.

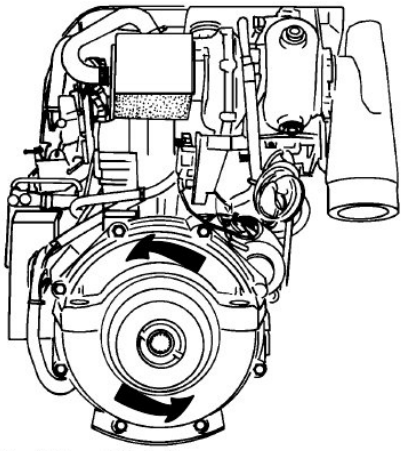

73330

a - Standard Left-Hand Rotation

Engine Serial Number and Identification Locations

Engine model and serial numbers are located on two plates attached on the engine where shown. Emission Certification Decals are placed where shown.

MIE (Inboard) Engine Shown [MCM (Stern Drive) Similar]

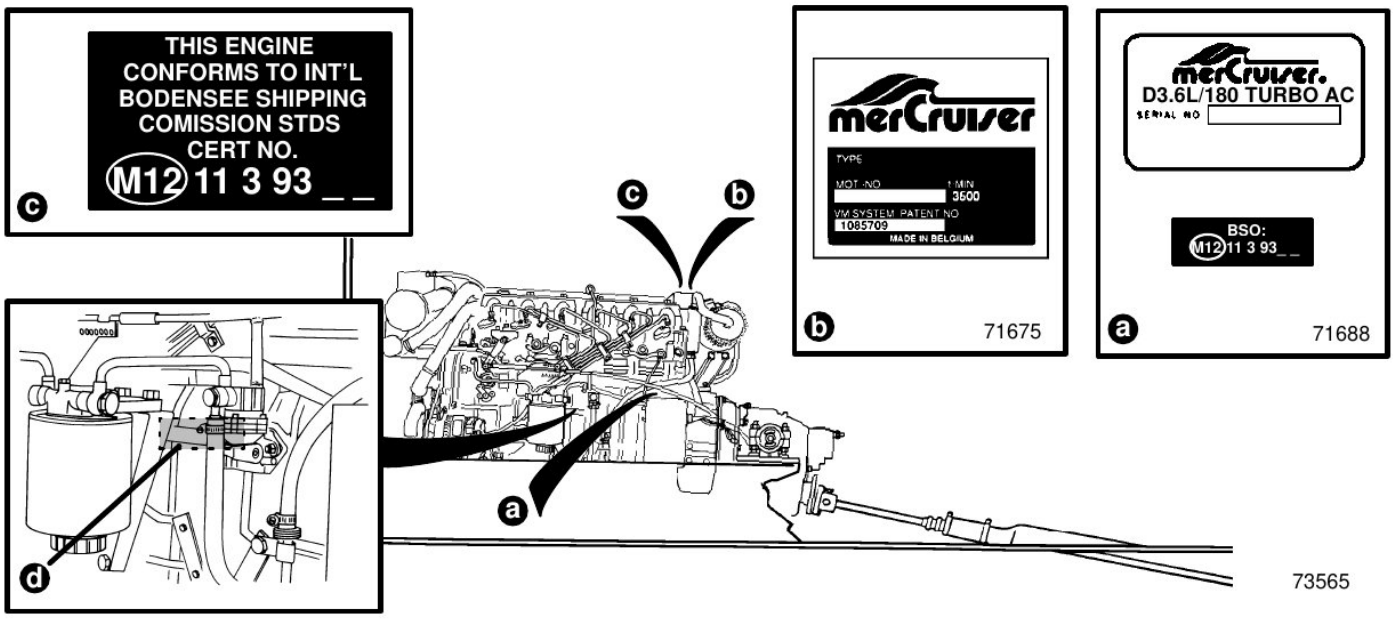

a - Riveted Serial Number Plate, and Emission Certification Decal If Applicable (Port Side of Engine Block, Near Top of Electrical Box)
b - Self-Adhesive Serial Number Plate (Applied to Top of Intercooler Duct)
c - Self-Adhesive Emission Certification Decal, If Applicable (Applied to Top of Intercooler Duct)
d - VM Serial Number (Stamped in Block)

APERÇU — Engine Manual — fichier complet disponible après achat

Propeller Information

Refer to the “Propeller” section in appropriate MerCruiser Stern Drive Service Manual, or order publication P/N 90-86144-92, “Everything you need to know about propellers.”

Changing diameter, pitch or coupling of a propeller will affect engine RPM and boat performance . The blade configuration also will affect performance. Two like propellers, same pitch and diameter, from two different manufacturers also will perform differently.

It is the responsibility of the boat manufacturer and/or selling dealer to equip the boat with the correct propeller to allow the engine to operate within its specified RPM range at wide-open-throttle (W.O.T.).

Because of the many variables of boat design and operation, only testing will determine the best propeller for the particular application.

To test for correct propeller, operate boat (with an average load onboard) at W.O.T. and check RPM with an accurate tachometer. Engine RPM should be near top of the specified range so that, under heavy load, engine speed will not fall below specifications.

If engine exceeds the specified RPM, an increase in pitch and/or diameter is required.

If engine is below rated RPM, a decrease in pitch and/or diameter is required.

Normally, a change of approximately 100 to 150 RPM will be achieved for each single pitch change of a propeller.

⚠CAUTION

If a propeller is installed that does not allow engine RPM to reach the specified full-throttle RPM range, the engine will “labor” and will not produce full power. Operation under this condition will cause excessive fuel consumption and engine overheating. On the other hand, installation of a propeller, that allows engine to run above the specified RPM limit, will cause excessive wear on internal engine parts which will lead to premature engine failure.

Water Testing New Engines

Use care during the first 20 hours of operation on new MerCruiser engines or possible engine failure may occur. If a new engine has to be water-tested at full throttle before the break-in period is complete, follow this procedure ONLY AFTER the engine INITIAL BREAK-IN PROCEDURE has been completed.

1. Start engine and run at idle RPM until normal operating temperature is reached.
2. Run boat up on plane.
3. Advance engine RPM (in 200 RPM increments) until engine reaches its maximum rated RPM.

IMPORTANT: Do not run at maximum RPM for more than 2 minutes.