# Service Manual Outline


**SECTION 1 - Important Information**
- A - General Information
- B - Maintenance
- C - Troubleshooting

**SECTION 2 - Removal and Installation**
- A - MCM (Sterndrive) Models

**SECTION 3 - Engine**
- A - D1.7L DTI Engine Mechanical

**SECTION 4 - Electrical System**
- A - Starting System
- B - Charging System
- C - Glow Plug System
- D - Instrumentation
- E - Wiring Diagrams

**SECTION 5 - Fuel System**
- A - Fuel Filter
- B - Fuel Injectors
- C - Injection Pump

**SECTION 6 - Cooling System**
- A - Closed Cooling

**SECTION 7 - Intake and Exhaust System**
- A - Intercooler
- B - Exhaust
- C - Turbocharger

**SECTION 8**
- A - Power Steering System

Important Information 1

Removal and Installation 2

Engine 3

Electrical System 4

Fuel System 5

Cooling System 6

Intake and Exhaust System 7

Power Steering System 8





APERÇU — Engine Manual — fichier complet disponible après achat 1/10

# Notice

Throughout this publication, Dangers, Warnings and Cautions (accompanied by the International HAZARD Symbol ⚠ ) are used to alert the mechanic to special instructions concerning a particular service or operation that may be hazardous if performed incorrectly or carelessly. **OBSERVE THEM CAREFULLY!**

These Safety Alerts alone cannot eliminate the hazards that they signal. Strict compliance to these special instructions when performing the service, plus Common Sense operation, are major accident prevention measures.

**⚠ DANGER**

**Immediate hazards which WILL result in severe personal injury or death.**

**⚠ WARNING**

**Hazards or unsafe practices which COULD result in severe personal injury or death.**

**⚠ CAUTION**

**Hazards or unsafe practices which COULD result in minor personal injury or product or property damage.**



APERÇU — Engine Manual — fichier complet disponible après achat 2/10

# Notice to Users of This Manual

This service manual has been written and published by Mercury Marine to aid our dealers, mechanics and company service personnel when servicing the products described herein. We assume that these personnel have been trained in and are familiar with the recommended servicing procedures of these products or like or similar products manufactured and marketed by Mercury Marine. Training includes the use of mechanic's common hand tools and the special marine tools.

We could not possibly know of and advise the service trade of all conceivable service procedures and of the possible hazards and/or results of each method. We have not undertaken any such wide evaluation. Therefore, anyone who uses a service procedure and/or tool, which is not recommended by the manufacturer, first must be completely satisfied that neither their own nor the product's safety will be endangered.

The electrical system is capable of violent and damaging short circuits or severe electrical shocks. When performing any work where electrical terminals could possibly be grounded or touched by the mechanic, the battery cables should be disconnected at the battery.

Any time the intake or exhaust openings are exposed they should be covered to prevent foreign material from entering the cylinders and damaging the engine.

Replacement fasteners must have the same measurements and strength as those removed. Numbers on the heads of the metric bolts and on surfaces of metric nuts indicate their strength. Customary bolts use radial lines for this purpose, while most customary nuts do not have strength markings. Mismatched or incorrect fasteners can result in damage, malfunction or possible personal injury. Therefore, fasteners removed should be saved for re-use in the same locations whenever possible. Where the fasteners are not satisfactory for re-use, care should be taken to select a replacement that meets the same specifications as the original.

All information, illustrations and specifications contained in this manual are based on the latest product information available at time of publication.

We reserve the right to make changes to this manual without prior notification.



APERÇU — Engine Manual — fichier complet disponible après achat 3/10

# Engine Mechanical Components

Many of the engine mechanical components are designed for marine applications. Unlike automotive engines, marine engines are subjected to extended periods of heavy load and wide open throttle operation and, therefore, require heavy-duty components. Special marine engine parts have design and manufacturing specifications that are required to provide long life and dependable performance. Marine engine parts also must be able to resist the corrosive action of salt or brackish water that will rust or corrode standard automotive parts within a short period of time.

# Replacement Parts

Failure to use recommended Quicksilver service replacement parts can result in poor engine performance and/or durability, rapid corrosion of parts subjected to salt water and possibly complete failure of the engine.

Use of parts other than recommended service replacement parts will void the warranty on those parts which are damaged as a result of the use of other than recommended replacement parts.

**⚠ WARNING**

**Electrical and fuel system components on Mercury MerCruiser Engines and Sterndrives are designed and manufactured to comply with U.S. Coast Guard Rules and Regulations to minimize risks of fire or explosion.**

**Use of replacement electrical or fuel system components that do not comply to these rules and regulations could result in a fire or explosion hazard and should be avoided.**

**When servicing the electrical and fuel systems it is extremely important that all components are properly installed and tightened. If not, any electrical component opening would permit sparks to ignite fuel vapors from fuel system leaks if they existed.**



APERÇU — Engine Manual — fichier complet disponible après achat 4/10

# Models Covered in This Manual

| MCM Model | Serial Number |
|---|---|
| D1.7L DTI | OM055001 and Above |

| NOTICE |
|---|
| **Refer to appropriate Sterndrive Service Manual for transom assembly and sterndrive unit repair.** |



APERÇU — Engine Manual — fichier complet disponible après achat 

THIS PAGE IS INTENTIONALLY BLANK



APERÇU — Engine Manual — fichier complet disponible après achat 

# IMPORTANT INFORMATION

## Section 1A - General Information

1 A

## Table of Contents


Introduction . . . . . 1A-3
How to Use This Manual . . . . . 1A-3
Engine Serial Number Locations . . . . . 1A-4
Operation / Duty Cycle . . . . . 1A-5
Engine Break-In . . . . . 1A-5




APERÇU — Engine Manual — fichier complet disponible après achat 7/10

# THIS PAGE IS INTENTIONALLY BLANK



APERÇU — Engine Manual — fichier complet disponible après achat 

# Introduction

This comprehensive overhaul and repair manual is designed as a service guide for the models previously listed. It provides specific information, including procedures for disassembly, inspection, assembly and adjustment to enable dealers and service mechanics to repair and tune these engines.

Before attempting repairs or tune-up, it is suggested that the procedure first be read through to gain knowledge of the methods and tools used and the cautions and warnings required for safety.

# How to Use This Manual

This manual is divided into sections which represent major components and systems. Some sections are further divided into parts which more fully describe the component. Sections and section parts are listed on the Service Manual Outline page following the Models Covered in This Manual, page iv.

## Page Numbering

Two number groups appear at the bottom of each page. Following is an example and description.

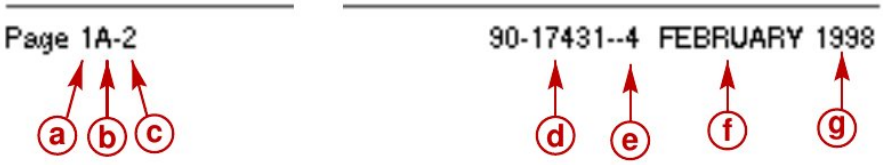


**a** - Section Number
**b** - Section Part
**c** - Page Number
**d** - Manual Number
**e** - Revision Number 4
**f** - Month Printed
**g** - Year Printed



APERÇU — Engine Manual — fichier complet disponible après achat 9/10

# Engine Serial Number / Decal Locations

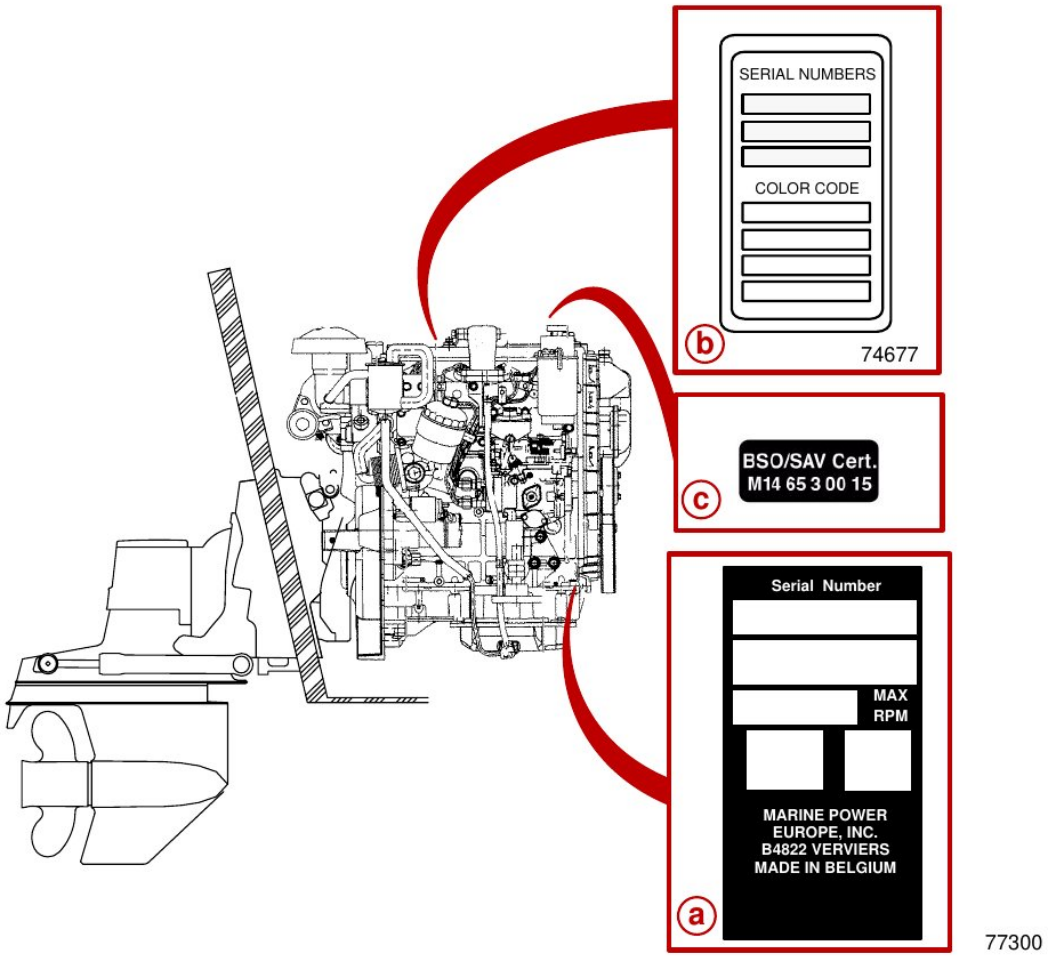


**Sterndrive (MCM)**

- **a** - Serial Number Plate
- **b** - Serialized Decal
- **c** - Emission Certificate Decal



APERÇU — Engine Manual — fichier complet disponible après achat 