Cleanliness and Care of Outboard Motor

A marine power product is a combination of many machined, honed, polished and lapped surfaces with tolerances that are measured in the ten thousands of an inch. When any product component is serviced, care and cleanliness are important. Throughout this manual, it should be understood that proper cleaning, and protection of machined surfaces and friction areas is a part of the repair procedure. This is considered standard shop practice even if not specifically stated.

Whenever components are removed for service, they should be retained in order. At the time of installation, they should be installed in the same locations and with the same mating surfaces as when removed.

Before raising or removing an outboard engine from a boat, the following precautions should be adhered to:

1. Check that flywheel is secured to end of crankshaft with a locknut and lifting eye is threaded into flywheel a minimum of 5 turns.
2. Connect a hoist of suitable strength to the lifting eye.

In addition, personnel should not work on or under an engine which is suspended. Engines should be attached to work stands, or lowered to ground as soon as possible.

We reserve the right to make changes to this manual without prior notification.

Refer to dealer service bulletins for other pertinent information concerning the products described in this manual.

Service Manual Outline

1 - General Information and Specifications
2 - Electrical and Ignition
A - Ignition System
B - Battery, Charging System and Starting System
C - Timing/Synchronizing and Adjusting
D - Wiring Diagrams
3 A - Fuel System and Carburetion
B - Oil Injection System
4 A - Powerhead (3-Cylinder Engines)
B - Powerhead (4-Cylinder Engines)
5 - Lower Unit
A - Gear Housing
B - Mid Section
C - Shock Absorber
6 - Power Trim
A - Design I (Side Fill Reservoir)
B - Design II (Aft Fill Reservoir)
C - Single Ram
7 - Outboard Motor Installation/Attachments
A - Engine Attachments/Engine Installation
B - Tiller Handle and Co-Pilot

Notice

Throughout this publication, “Dangers”, “Warnings” and “Cautions” (outlined in a border and accompanied by the International HAZARD Symbol ⚠) are used to alert the mechanic to special instructions concerning a particular service or operation that may be hazardous if performed incorrectly or carelessly.
OBSERVE THEM CAREFULLY!

These “Safety Alerts” alone cannot eliminate the hazards that they signal. Strict compliance to these special instructions when performing the service, plus “common sense” operation, are major accident prevention measures.

⚠ DANGER

DANGER — Immediate hazards which WILL result in severe personal injury or death.

⚠ WARNING

WARNING - Hazards or unsafe practices which COULD result in severe personal injury or death.

⚠ CAUTION

CAUTION — Hazards or unsafe practices which could result in minor personal injury or product or property damage.

Notice to Users of This Manual

This service manual has been written and published by the service department of Mercury Marine to aid our dealers’ mechanics and company service personnel when servicing the products described herein.

It is assumed that these personnel are familiar with the servicing procedures of these products, or like or similar products manufactured and marketed by Mercury Marine, that they have been trained in the recommended servicing procedures of these products which includes the use of mechanic’s common hand tools and the special Mercury Marine or recommended tools from other suppliers.

We could not possibly know of and advise the service trade of all conceivable procedures by which a service might be performed and of the possible hazards and/or results of each method. We have not undertaken any such wide evaluation. Therefore, anyone who uses a service procedure and/or tool, which is not recommended by the manufacturer, first must completely satisfy himself that neither his nor the product’s safety will be endangered by the service procedure selected.

All information, illustrations and specifications contained in this manual are based on the latest product information available at the time of publication. As required, revisions to this manual will be sent to all dealers contracted by us to sell and/or service these products.

It should be kept in mind, while working on the product, that the electrical system and ignition system is capable of violent and damaging short circuits or severe electrical shocks. When performing any work where electrical terminals could possibly be grounded or touched by the mechanic, the battery cables should be disconnected at the battery.

Any time the intake or exhaust openings are exposed during service they should be covered to protect against accidental entrance of foreign material which could enter the cylinders and cause extensive internal damage when the engine is started.

It is important to note that, during any maintenance procedure, replacement fasteners must have the same measurements and strength as those removed, whether metric or customary. Numbers on the heads of the metric bolts and on surfaces of metric nuts indicate their strength. Customary bolts use radial lines for this purpose, while most customary nuts do not have strength markings. Mismatched or incorrect fasteners can result in damage or malfunction, or possible personal injury. Therefore, fasteners removed should be saved for re-use in the same locations whenever possible. Where the fasteners are not satisfactory for re-use care should be taken to select a replacement that matches the original.

GENERAL INFORMATION AND SPECIFICATIONS

1

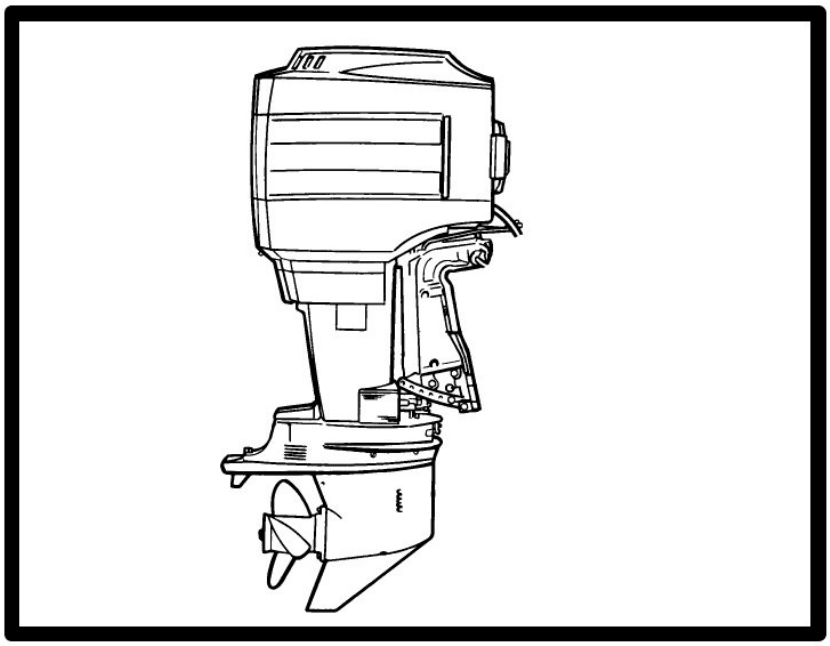

Table Of Contents

	Page
General Specification	1-1
Cowl Removal	1-3
Filling Oil Injection System	1-3
Power Trim General Information	1-4
Trim “In” Angle Adjustment	1-4
Models with Power Trim	1-4
Checking Trim System Fluid Level	1-5
Tilt Angle Adjustment	1-5
Models without Power Trim	1-5
Connecting Engine Wiring Harness and Routing of Engine Battery Cables	1-6
Ride-Guide Steering Cable and Pivot Points Lubrication	1-7
Following Complete Submersion	1-8
Salt Water Submersion (Special Instructions)	1-8
Submerged While Running (Special Instructions)	1-8
Submerged Engine (Fresh Water) (Plus Special Instructions)	1-8
Out-of-Season Outboard Storage	1-9
How Weather Affects Engine Performance	1-10
Conditions Affecting Operation	1-11
Detonation: Causes and Prevention	1-12
Compression Check	1-12

APERÇU — Engine Manual — fichier complet disponible après achat

General Specification

NOTE: Other specification (torques, etc.) are listed in the respective sections.

	Model 70	Model 75	Model 80	Model 90
Horsepower	70 (52.2 kw)	75 (55.9 kw)	80 (59.6 kw)	90 (67.1 kw)
Idle RPM (in forward gear)	650 - 700			
Full Throttle RPM Range	4750 - 5250			5000 - 5500
Piston Replacement	71.12 (1165.7cc)			
Cylinder Bore	3.375 (85.7mm)			
Stroke	2.65 (67.3mm)			
Engine Type	3 Cylinder, 2 Cycle			
Ignition Type	C.D. Breakerless			
Recommended Spark Plug	NGK-BUHW-2 or AC-V40 FFK or Champion L78V		Inductor Plugs: NGK-BUZHW-2 or Champion QL78V	
Cylinder Firing Order	1-3-2			
Recommended Power Trim Fluid	Quicksilver Power Trim & Steering Fluid or Automotive Transmission Fluid (ATF) Type F, FA or Dexron II			
Recommended Gasoline	Regular Leaded, Premium, Low-Lead and Lead-Free automotive gasolines with a minimum pump posted octane rating of 86			
Recommended Oil	Quicksilver TC-WII or TC-W3 2-Cycle Outboard Oil			
Engine Weight ELO ELOPT	260 lbs. 280 lbs.			
Fuel Tank Capacity	6.6 U.S. Gallons (5 Imp. Gals.; 25 Liters)			
Gear Housing Lubricant Capacity	22.5 fl. oz. (665.3ml)			
Gasoline/Oil Ratio at Idle	80:1			
Gasoline/Oil Ratio at W.O.T.	50:1			
Gear Ratio	2.3:1			
Oil Injection Tank Capacity				
Tank Capacity	1 gal. (3.78 liter)			
Maximum operation per tank full of oil at W.O.T.	6 hours			
Oil remaining when warning buzzer sounds	1 qt. (.95 liter)			
Operating time remaining at wide open throttle when warning buzzer sounds	1 Hour			

APERÇU — Engine Manual — fichier complet disponible après achat 5/10

General Specification (continued)

NOTE: Other specification (torques, etc.) are listed in the respective sections.

	Model 100	Model 115
Horsepower	100 (74.6 kw)	115 (85.8 kw)
Idle RPM (in forward gear)	650 - 700	
Full Throttle RPM Range	4750 - 5250	
Piston Replacement	105 (1720.9cc)	
Cylinder Bore	3.375 (85.7mm)	
Stroke	2.930 (74.4mm)	
Engine Type	4 Cylinder, 2 Cycle	
Ignition Type	C.D. Breakerless	
Recommended Spark Plug	NGK-BPH8H-N-10* Gap - 0.040 in. (1.0mm) Inductor Plug NGK BPZ 8H-N-10* Gap - 0.040 in. (1.0mm) NGK-BUHW	
Cylinder Firing Order	1-3-2-4	
Recommended Power Trim Fluid	Quicksilver Power Trim & Steering Fluid or Automotive Transmission Fluid (ATF) Type F, FA or Dexron II	
Recommended Gasoline	Regular Leaded, Premium, Low-Lead and Lead-Free automotive gasolines with a minimum pump posted octane rating of 86	
Recommended Oil	Quicksilver 2-Cycle Outboard Oil	
Engine Weight ELO ELOPT	340 lbs. 360 lbs.	
Fuel Tank Capacity	6.6 U.S. Gallons (5 Imp. Gals.; 25 Liters)	
Gear Housing Lubricant Capacity	22.5 fl. oz. (665.2ml)	
Gasoline/Oil Ratio at Idle	80:1	
Gasoline/Oil Ratio at W.O.T.	50:1	
Gear Ratio	2.07:1	
Oil Injection Tank Capacity		
Tank Capacity	1.4 gal. (5.3 liters)	
Maximum operation per tank full of oil at W.O.T.	5 hours	
Oil remaining when warning buzzer sounds	1 qt. (.95 liter)	
Operating time remaining at wide open throttle when warning buzzer sounds	50 min. approx.	

*Improves running quality between 1800 – 2000 RPM.

APERÇU — Engine Manual — fichier complet disponible après achat 6/10

Cowl Removal

Pull outward on starboard side of front shield (a).

Remove spring (b) from latch and open cowls.

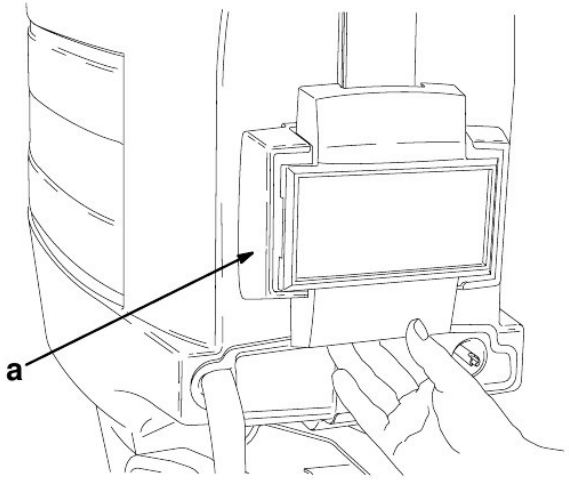

18291

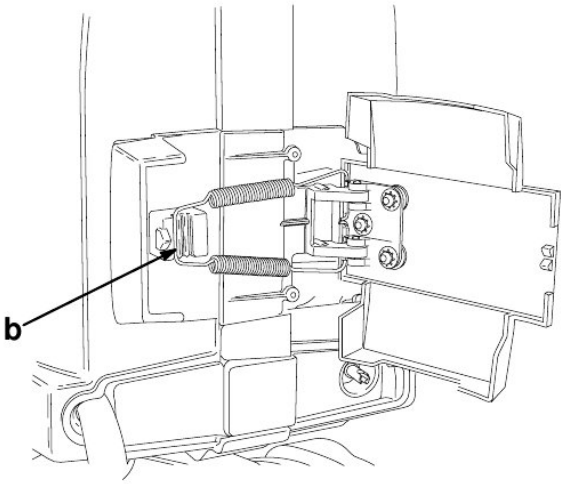

18292

Filling Oil Injection System

Open starboard cowl (refer to cowl removal on this page). Some earlier outboards will have a cowl bracket to hold cowl open as shown.

Fill tank with recommended oil.

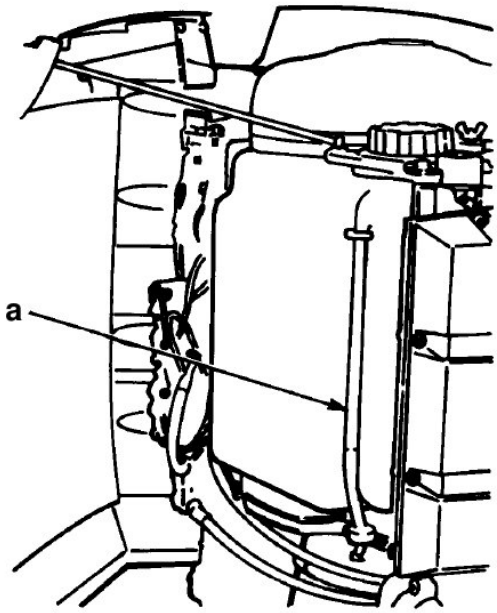

a - Oil Tank Tube

APERÇU — Engine Manual — fichier complet disponible après achat 7/10

Power Trim System

GENERAL INFORMATION

The power trim system is filled at the manufacturer and is ready for use.

Trim outboard through entire trailering range several times to remove any air from the system.

The trim system is pressurized and is not externally vented. The outboard can be raised or lowered manually by loosening the manual release valve four turns.

The trim “out” angle of this outboard is not adjustable. The trim system has an internal valve which will automatically stop the outward trim travel at 20″ when engine RPM is approximately 2000 RPM or higher; outboard also has to be in water and in gear.

The outboard can be operated beyond the 20″ trim limit for operating outboard in shallow water if engine RPM is kept below approximately 2000 RPM.

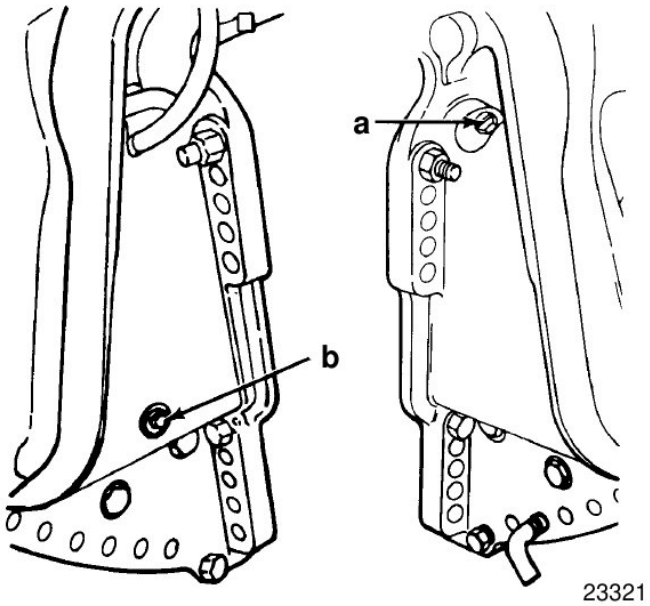

23321

a - Fill Screw (System is Pressurized, DO NOT Open Unless Outboard is Tilted to Full Up Position)
b - Manual Release Valve

Trim “In” Angle Adjustment

MODELS WITH POWER TRIM

⚠ WARNING

Operating some boats with outboard trimmed to the full “in” trim angle [not using trim adjustment bolt (a)] at planing speed will cause undesirable and/or unsafe steering conditions. Each boat MUST BE water tested for handling characteristics after outboard installation and after any trim adjustments.

IMPORTANT: Some boat/motor combinations, that do not use the trim adjustment bolt (a) and are trimmed to the full “in” trim angle, will not experience any undesirable and/or unsafe steering conditions during planing speed. Thus, not using trim adjustment bolt may be desired. However, some boats with outboard trimmed to the full “in” trim angle at planing speeds will cause undesirable and/or unsafe steering conditions. If these steering conditions are experienced, under no circumstances should the outboard be operated without the trim adjustment bolt and without the bolt adjusted in the proper holes to prevent unsafe handling characteristics.

Water test the boat not using the trim adjustment bolt. If undesirable and/or unsafe steering conditions are experienced (boat runs with nose down), install trim adjustment bolt in proper hole to prevent unsafe handling characteristics.

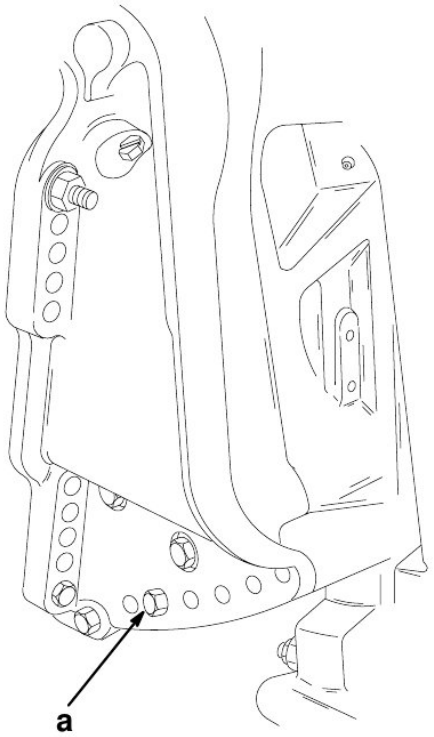

22744

APERÇU — Engine Manual — fichier complet disponible après achat 8/10

Checking Trim System Fluid Level

IMPORTANT: This trim system is pressurized. Remove fill screw (b) when outboard is trimmed to the full "up" position. Retighten fill screw securely.

1. Trim outboard to full "up" position. Engage tilt lock lever. Trim system fluid can only be checked when outboard is in this position.
2. Remove fill screw and check fluid level. Fluid level should be visible in fill tube.
3. If necessary, add Quicksilver Power Trim and Steering Fluid; or Automatic Transmission Fluid (ATF) Type F, FA or Dextron II.

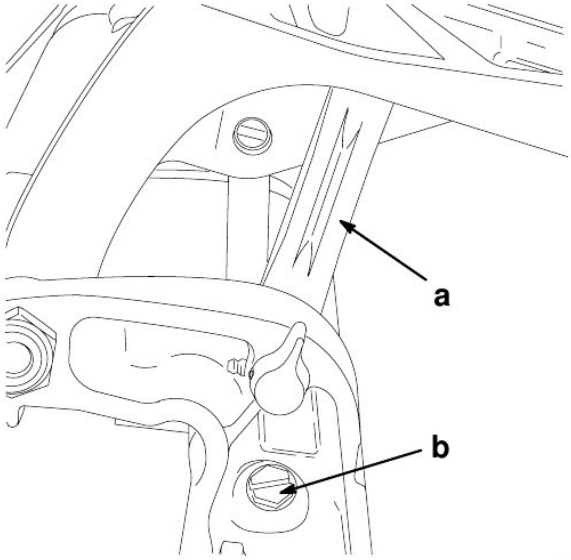

20319

a - Tilt Lock Lever
b - Fill Screw

Tilt Angle Adjustment

MODELS WITHOUT POWER TRIM

⚠ WARNING

Operating some boats at minimum trim "In" at planing speeds will cause undesirable and/or unsafe steering conditions. Each boat should be tested for handling characteristics after any adjustment is made to the tilt angle.

DO NOT OPERATE motor with tilt lock pin removed.

Adjust tilt angle of motor on transom with tilt lock pin so that anti-ventilation plate is about parallel and even with bottom of boat. Speed sometimes may be improved by tilting motor out one tilt pin hole to raise bow and reduce wetted surface. If motor is tilted in, boat will ride bow down, wetting more of the bottom and reducing speed, which generally will improve operation in rough water. Under ideal conditions, efficiency is best with lower unit operating in level position. Operation with excessive tilt angle will reduce performance noticeably and may induce ventilation. It is preferable to level boat by proper loading rather than by extreme adjustment of tilt angle.

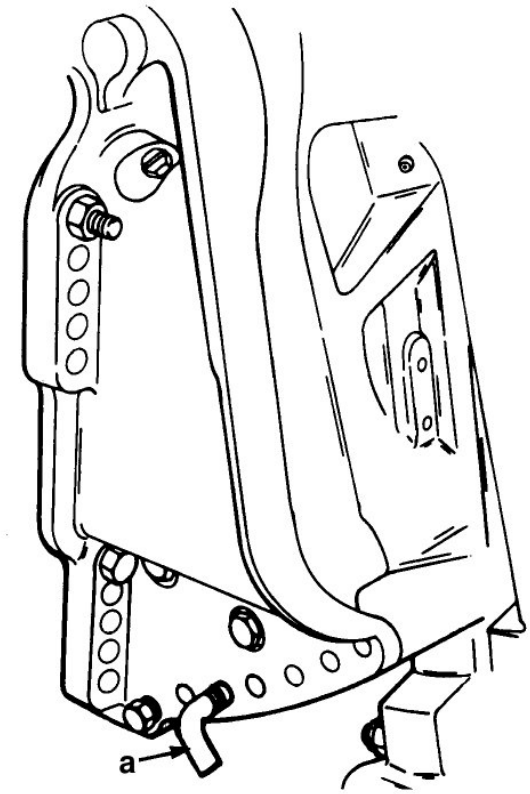

22744

a - Tilt Lock Pin

APERÇU — Engine Manual — fichier complet disponible après achat 9/10

Connecting Engine Wiring Harness and Routing of Engine Battery Cables

⚠ WARNING

Cables passing through cowl must be protected from chafing or being cut, by using the neoprene sheet as described in the following steps. Failure to protect cables as described could result in electrical system failure and/or possible injury to occupants of boat.

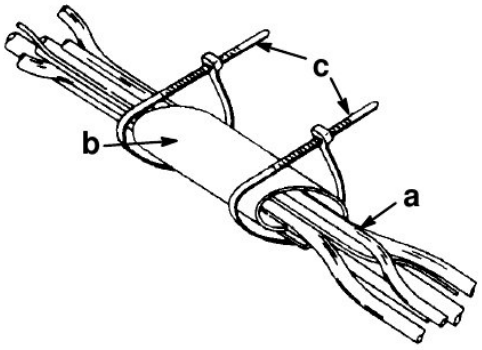

Models with Power Trim

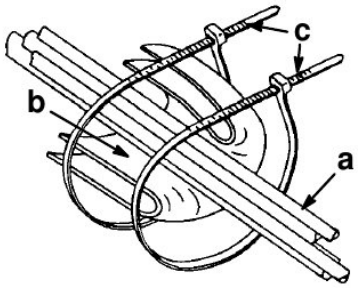

Models without Power Trim

a - Wiring Harness
b - Neoprene Sheet
c - Sta-Straps

1. Plug remote control harness connector into engine harness connector, then secure connector in place with retainer as shown.
2. Wrap neoprene sheet around cable bundle and secure each end with a sta-strap. Secure to bracket with retainer.

IMPORTANT: On Models without Power Trim, the neoprene sheet must be folded once and then wrapped around cables as shown.

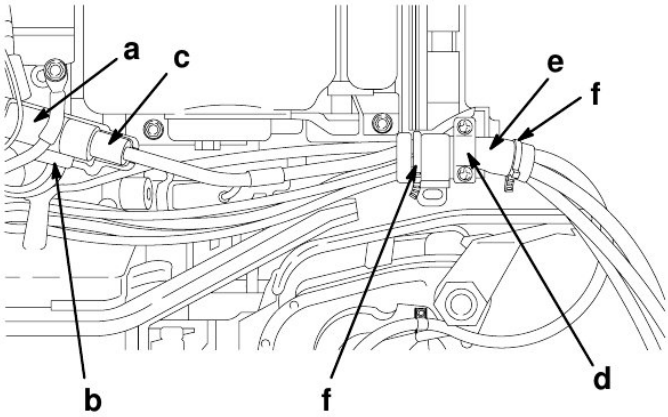

20290

a - Engine Connector
b - Retainer
c - Harness Connector
d - Harness Retainer
e - Neoprene Sheet
f - Sta-Strap(s)

Models with Power Trim

APERÇU — Engine Manual — fichier complet disponible après achat 10/10